HELIX™
LINEAR TECHNOLOGIES

PR

LEAD SCREW LINEAR ACTUATORS

Profile Rail Linear Actuators

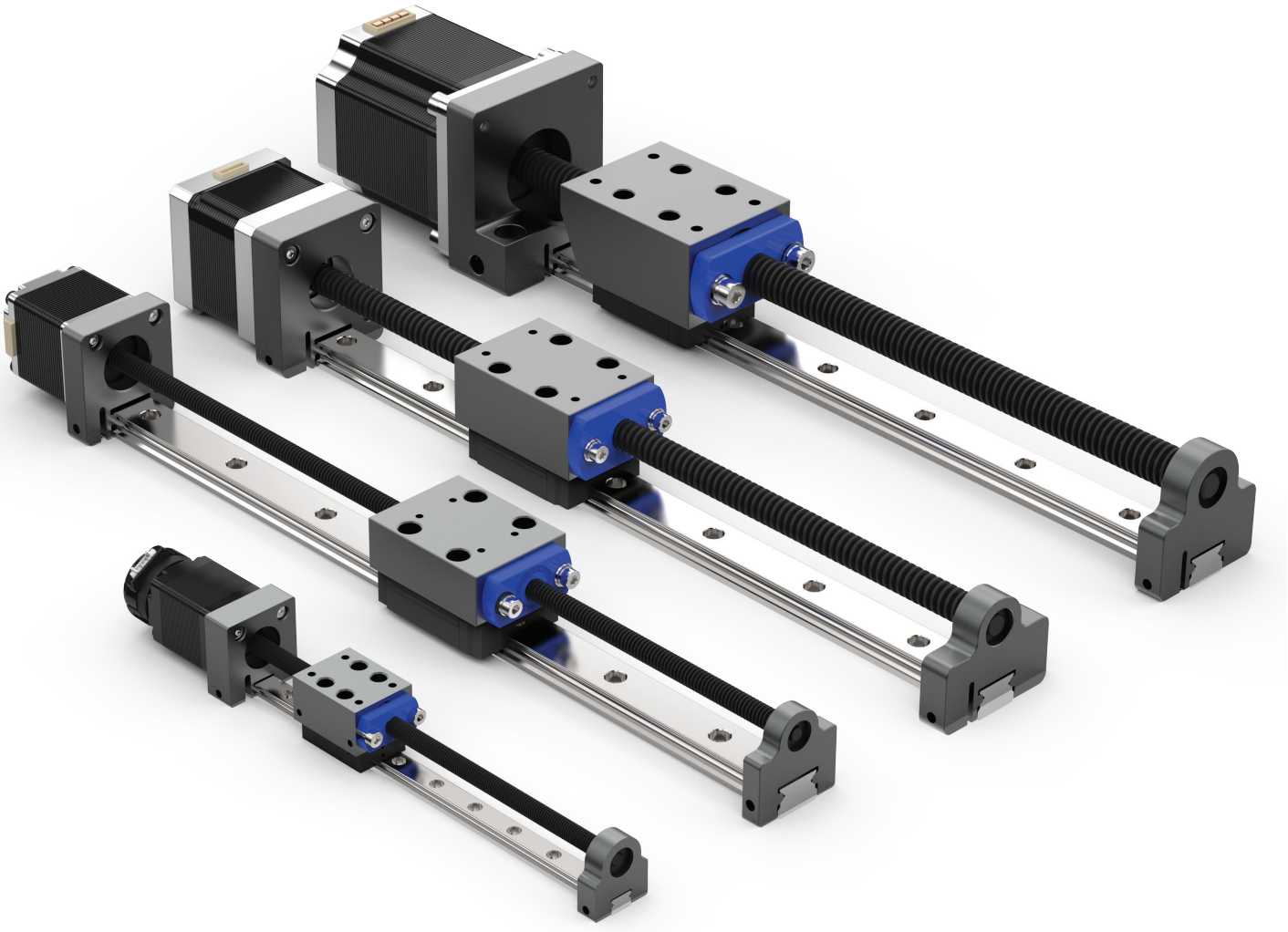

ITAR International Traffic in Arms Regulations Compliant

ISO 9001 : 2008 CERTIFIED

helixlinear.com

Helix Linear Technologies, Inc., Beachwood, Ohio

COMPANY

Helix is a global supplier to the Medical Device, Life Science, Security, Semiconductor, Aerospace, Electromechanical and Defense industries. Helix leads the linear motion industry by manufacturing the highest quality linear actuation solutions in the world. We focus entirely on manufacturing electromechanical actuation systems that help our customer be more productive and profitable. Our execution of innovative product designs solves real problems for our customers and builds a foundation for long term success.

HISTORY

Helix was founded in 2011 to manufacture high-quality lead screws for the growing electromechanical actuation industry. Helix's rapid growth has included the addition of linear actuator solutions to deliver integrated and turnkey solutions.

CULTURE

Our culture is based on a team of smart, happy and competitive professionals focused on manufacturing innovative products centered on delivering precise electromechanical linear motion solutions. We are in the people business, as well as the product business. People make and sell our products and a team of smart, happy and competitive people make a company healthy.

OPERATIONS

Our company is built to deliver high-quality products and engineering support to solve the most demanding linear motion applications in any industry. We deliver components and subsystem solutions to high volume OEMs and custom machine builders to help secure their success.

23200 Commerce Park Road | Beachwood, OH 44122 USA | 216-485-2232 or 1-855-435-4958 | email: sales@helixlinear.com

TABLE OF CONTENTS

PR Lead Screw Actuators

NEMA 8, 11, 17, 23

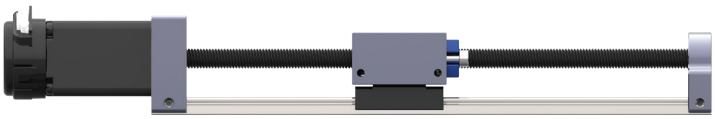

4-11

Lead Screw Options

300 Series Stainless Steel +/- 0.0003/inch lead accuracy

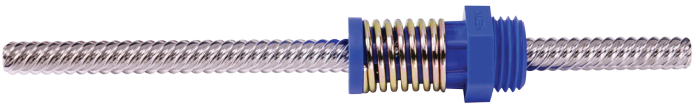

3

Buckling Column Load Curves

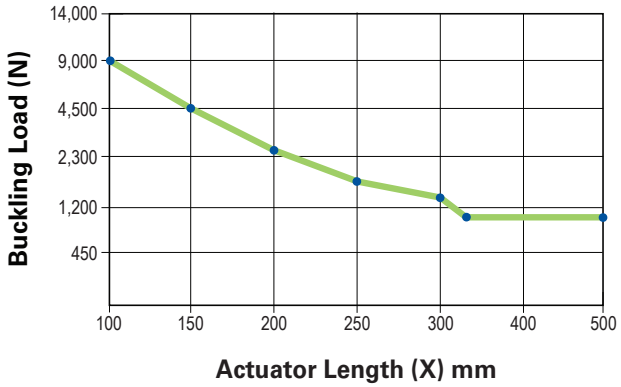

17

COMPANY OVERVIEW	IFC
ORDERING GUIDE	2
LEAD SCREW OPTIONS	3
PRA 8 LEAD SCREW LINEAR ACTUATOR	4-5
PRA 11 LEAD SCREW LINEAR ACTUATOR	6-7
PRA 17 LEAD SCREW LINEAR ACTUATOR	8-9
PRA 23 LEAD SCREW LINEAR ACTUATOR	10-11
STEPPER MOTOR OPTIONS ENCODER OPTIONS H4X™ PTFE COATING SCREW AND NUT OPTIONS	12
CUSTOM SOLUTIONS	13-14
PERFORMANCE CHARTS	16
BUCKLE COLUMN LOADS	17

2D/3D CAD ONLINE
helixlinear.com

PR LEAD SCREW LINEAR ACTUATOR

Helix Profile Rail Linear Actuators feature smooth, clean and quiet linear positioning. The PRA is built with a 300 series stainless steel precision lead screw coated with the Helix H4X™ PTFE dry lubricant that extends the lead screw nut life by 8-10X. The lead screw assembly also incorporates a standard or anti-backlash nut to eliminate axial and radial lash.

The PRA linear actuator utilizes a precision ground profile rail for guidance to deliver pitch, roll and yaw guidance. These pre-assembled linear actuators offer a turn-key solution for linear motion solutions and quick deliveries.

PRA Ordering Guide Table

PRA	-	17	D	-	25	N	-	10.00	-	E200	-	A
Series	-	**Series Model**	**Motor Length**	-	**Lead Code**	**Nut Style**	-	**Actuator Length**	-	**Encoder**	-	**Encoder Position**
PRA		**8**	**S** Single Stack		See Lead Code Table Pg. 5	**N** Standard Freewheeling Nut		Length (inch) example: **10.00**		**E 200** 200 CPR		**A**
		11								**E 500** 500 CPR		
		17	**D** Double Stack			**A** Axial Anti-Backlash				**E 1000** 1000 CPR		**B**
		23	**T** Triple Stack			**R** Radial Anti-Backlash				**E 2000** 2000 CPR		

Consult our Application Engineers (sales@helixlinear.com) for custom solutions.

Encoder Position Diagram

NEMA Size 8

Position A

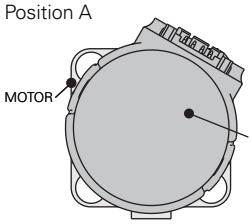

Position B

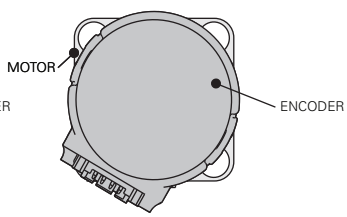

NEMA Sizes 11, 14, 17, 23

Position A

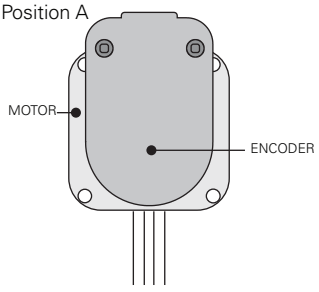

Position B

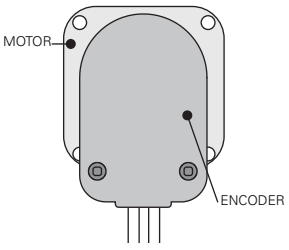

LEAD SCREW OPTIONS

PRA-8

Screw Diameter	Diameter Code	Lead	Lead Code	Efficiency %	Torque (in-lb)
0.1875	018	0.0240	024	17-29	0.016
0.1875	018	0.0250	025	17-29	0.017
0.1875	018	0.0313	031	24-34	0.018
0.1875	018	0.0394	039	24-39	0.020
0.1875	018	0.0480	048	28-44	0.021
0.1875	018	0.0500	050	29-45	0.022
0.1875	018	0.0625	062	34-51	0.024
0.1875	018	0.0787	078	39-56	0.027
0.1875	018	0.0960	096	43-61	0.029
0.1875	018	0.1000	100	44-62	0.030
0.1875	018	0.1250	125	49-66	0.035
0.1875	018	0.1575	157	54-71	0.040
0.1875	018	0.200	200	58-74	0.048

PRA11

Screw Diameter	Diameter Code	Lead	Lead Code	Efficiency %	Torque (in-lb)
0.250	025	0.0250	025	14-25	0.021
0.250	025	0.0393	039	21-35	0.022
0.250	025	0.0500	050	26-41	0.024
0.250	025	0.0625	062	31-48	0.026
0.250	025	0.0787	078	35-52	0.029
0.250	025	0.1000	100	41-58	0.032
0.250	025	0.1125	125	46-64	0.036
0.250	025	0.2000	200	60-75	0.058
0.250	025	0.2500	250	60-76	0.059
0.250	025	0.3330	333	63-79	0.075
0.250	025	0.5000	500	63-79	0.112
0.250	025	0.7500	750	63-79	0.189
0.250	025	1.000	999	64-80	0.224

PRA17

Screw Diameter	Diameter Code	Lead	Lead Code	Efficiency %	Torque (in-lb)
0.375	037	0.050	050	18-31	.033
0.375	037	0.078	078	27-43	.036
0.375	037	0.100	100	33-50	.039
0.375	037	0.157	157	42-59	.050
0.375	037	0.196	196	43-61	.058
0.375	037	0.200	200	48-66	.059
0.375	037	0.250	250	51-68	.067
0.375	037	0.375	375	59-75	.089
0.375	037	0.400	400	61-77	.092
0.375	037	0.472	472	65-81	.103
0.375	037	0.500	500	63-79	.112
0.375	037	0.750	750	63-79	.185
0.375	037	0.984	984	63-79	.201
0.375	037	1.000	999	63-79	.224
0.375	037	1.200	M30	69-86	.244

PRA23

Screw Diameter	Diameter Code	Lead	Lead Code	Efficiency %	Torque (in-lb)
0.500	050	0.0980	098	43-61	.029
0.500	050	0.1000	100	32-40	.044
0.500	050	0.1960	196	45-55	.129
0.500	050	0.2000	200	46-57	.062
0.500	050	0.5000	500	60-75	.119
0.500	050	0.6300	630	60-75	.130
0.500	050	1.0000	999	64-80	.221

The specifications and data in this publication are believed to be accurate and reliable. However, it is the responsibility of the product user to determine the suitability of Helix products for a specific application. While defective products will be replaced without charge if promptly returned, no liability is assumed beyond such replacement.

PRA-8 - LEAD SCREW LINEAR ACTUATOR

NEMA 8 - Hybrid Stepper Motor
(1.8° Step Angle)

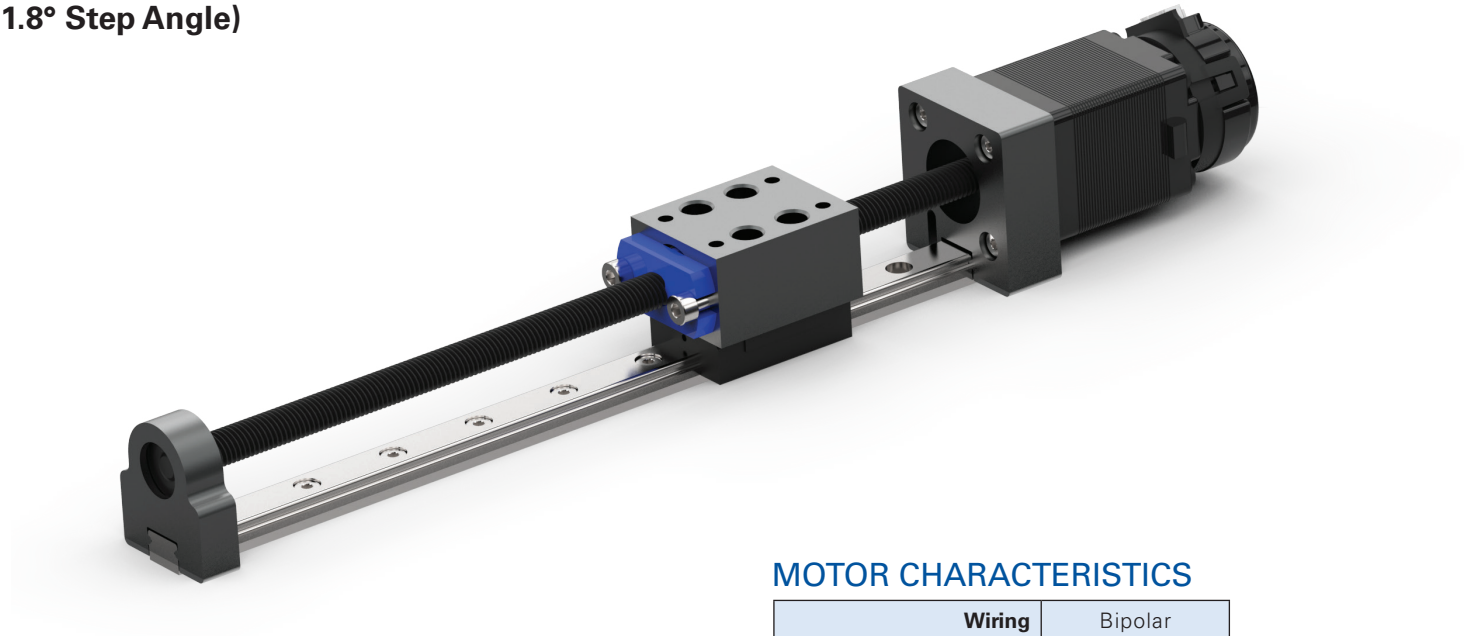

AVAILABLE LEAD SCREWS

Model	Screw Diameter	Lead	Pitch	Travel Per Step
PRA-8-024	0.1875	0.0240	0.0240	0.0001200
PRA-8-025	0.1875	0.0250	0.0250	0.0001250
PRA-8-031	0.1875	0.0313	0.0313	0.0001565
PRA-8-039	0.1875	0.0394	0.0394	0.0001970
PRA-8-048	0.1875	0.0480	0.0480	0.0002400
PRA-8-050	0.1875	0.0500	0.0500	0.0002500
PRA-8-062	0.1875	0.0625	0.0313	0.0003125
PRA-8-078	0.1875	0.0787	0.0394	0.0003935
PRA-8-096	0.1875	0.0960	0.0480	0.0004800
PRA-8-100	0.1875	0.1000	0.0500	0.0005000
PRA-8-125	0.1875	0.1250	0.0313	0.0006250
PRA-8-157	0.1875	0.1575	0.0394	0.0007875
PRA-8-200	0.1875	0.2000	0.0500	0.0010000

MOTOR CHARACTERISTICS

Wiring	Bipolar
Step Angle	1.8
Operating Voltage	5 VDC
Current / Phase	0.24 A
Resistance / Phase	20.4 Ω
Inductance / Phase	5.0 mH
Power Consumption	2.4 W
Temperature Rise	135° F
Weight	1.5 oz (43g)
Insulation Resistance	20 M Ω

WIRING DIAGRAM

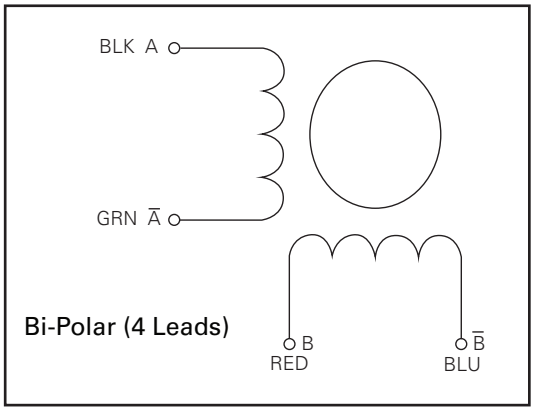

PRA-8 - SPECIFICATIONS

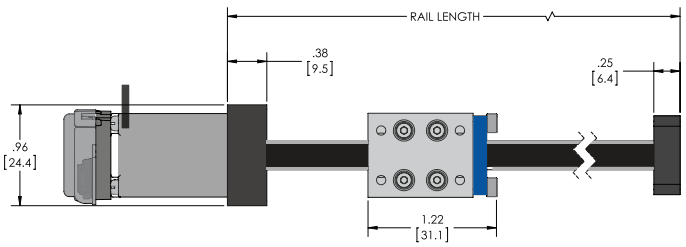

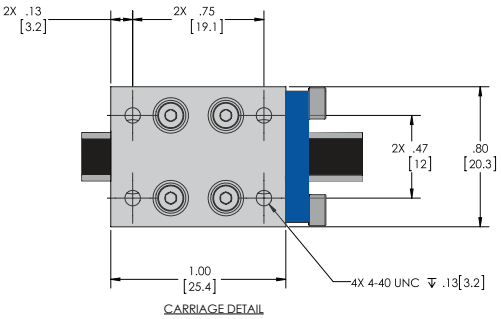

CARRIAGE DETAIL

RAIL LENGTH = TRAVEL + 1.9"

RECOMMENDED OVERTRAVEL OF 5mm BE ADDED TO EACH END OF DESIRED STROKE WHEN USING STEPPER MOTOR

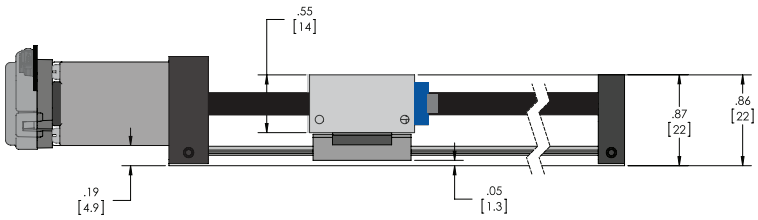

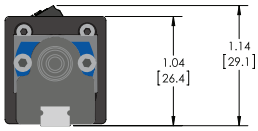

PRA 8 with optional potentiometer

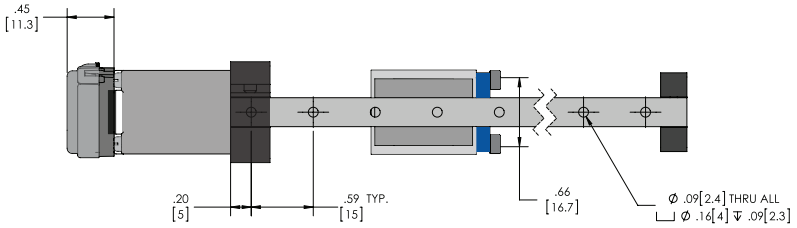

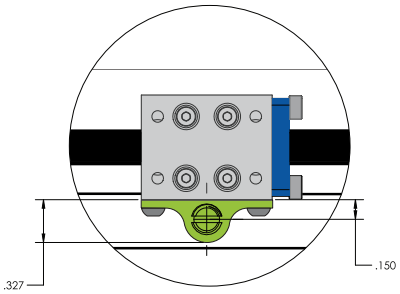

FORCE/SPEED CHARTS

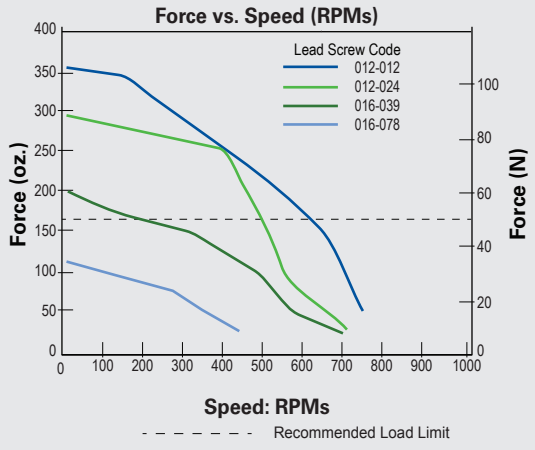

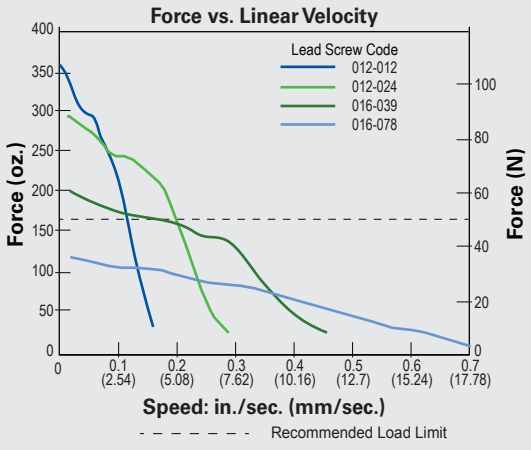

The specifications and data in this publication are believed to be accurate and reliable. However, it is the responsibility of the product user to determine the suitability of Helix products for a specific application. While defective products will be replaced without charge if promptly returned, no liability is assumed beyond such replacement.

PRA-11 - LEAD SCREW LINEAR ACTUATOR

NEMA 11 - Hybrid Stepper Motor
(1.8° Step Angle)

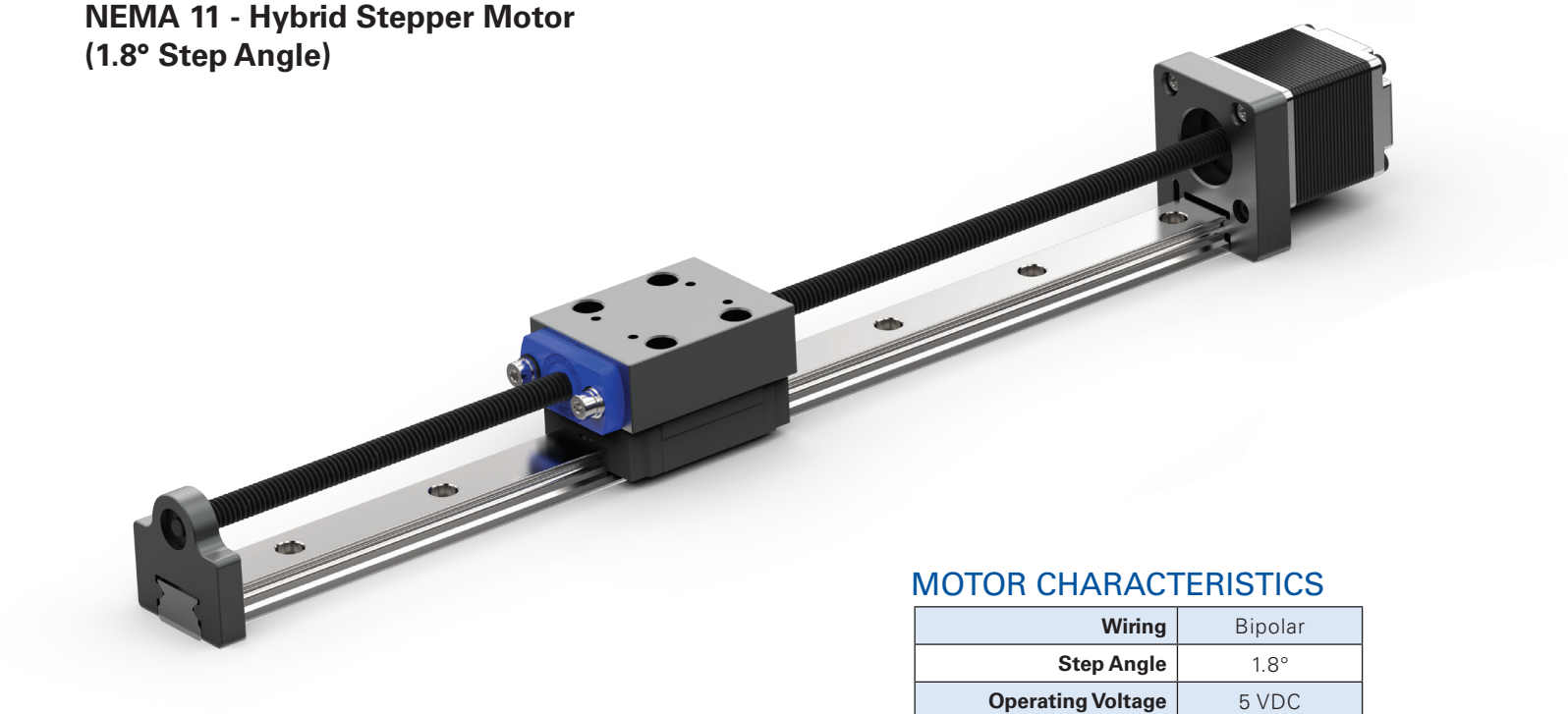

AVAILABLE LEAD SCREWS

Model	Screw Diameter	Lead	Pitch	Travel Per Step
PRA-11-025	0.250	0.0250	0.0625	0.0001250
PRA-11-039	0.250	0.0393	0.0394	0.0001965
PRA-11-050	0.250	0.0500	0.0500	0.0002500
PRA-11-062	0.250	0.0625	0.0625	0.0003125
PRA-11-078	0.250	0.0787	0.0394	0.0003935
PRA-11-100	0.250	0.1000	0.0500	0.0005000
PRA-11-118	0.250	0.1180	0.0393	0.0005900
PRA-11-200	0.250	0.2000	0.0500	0.0010000
PRA-11-250	0.250	0.2500	0.0625	0.0012500
PRA-11-393	0.250	0.3930	0.0328	0.0019650
PRA-11-500	0.250	0.5000	0.1250	0.0025000
PRA-11-750	0.250	0.7500	0.0625	0.0037500
PRA-11-999	0.250	1.0000	0.1000	0.0050000

MOTOR CHARACTERISTICS

Wiring	Bipolar
Step Angle	1.8°
Operating Voltage	5 VDC
Current / Phase	0.42 A
Resistance / Phase	11.9 Ω
Inductance / Phase	6.7 mH
Power Consumption	4.2 W
Temperature Rise	135° F
Weight	4.2oz (119g)
Insulation Resistance	20 M Ω

WIRING DIAGRAM

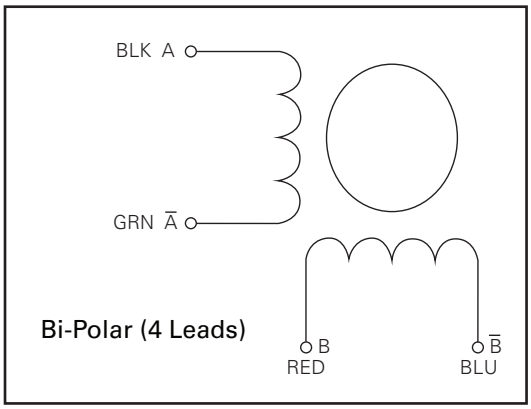

PRA-11 - SPECIFICATIONS

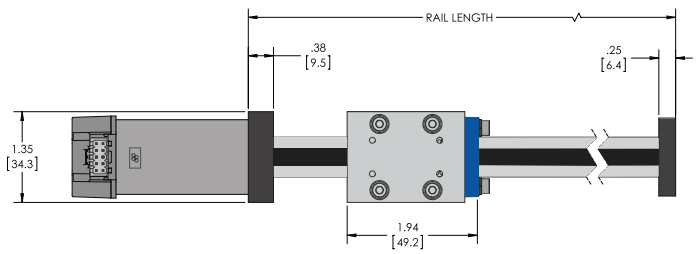

RAIL LENGTH = TRAVEL + 2.6"

RECOMMENDED OVERTRAVEL OF 10mm BE ADDED TO EACH END OF DESIRED STROKE WHEN USING STEPPER MOTOR

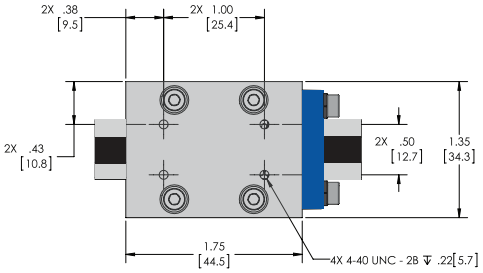

CARRIAGE DETAIL

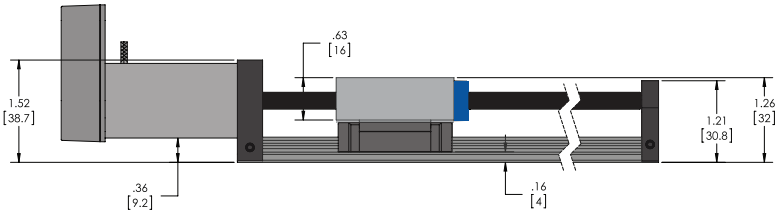

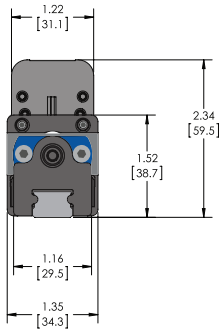

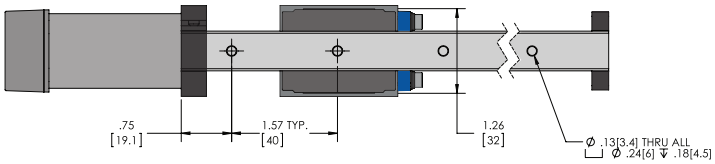

FORCE/SPEED CHARTS

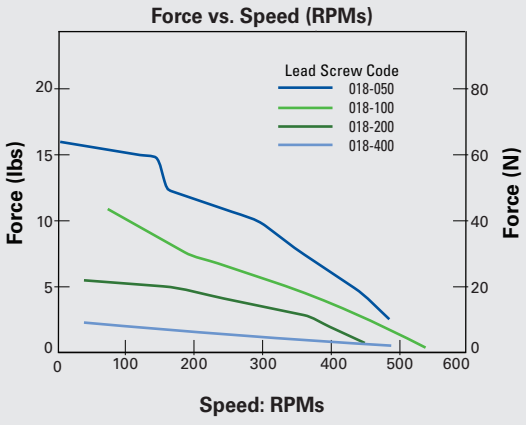

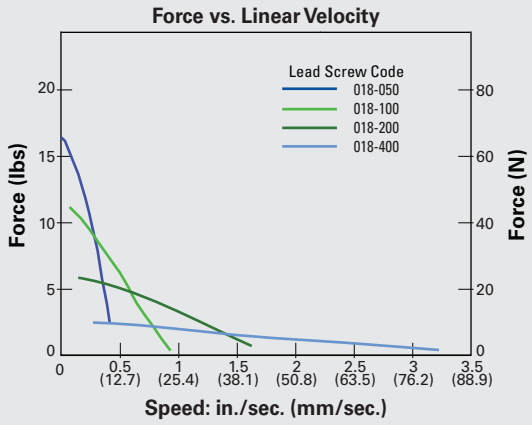

The specifications and data in this publication are believed to be accurate and reliable. However, it is the responsibility of the product user to determine the suitability of Helix products for a specific application. While defective products will be replaced without charge if promptly returned, no liability is assumed beyond such replacement.

PRA-17 - LEAD SCREW LINEAR ACTUATOR

NEMA 17 - Hybrid Stepper Motor
(1.8° Step Angle)

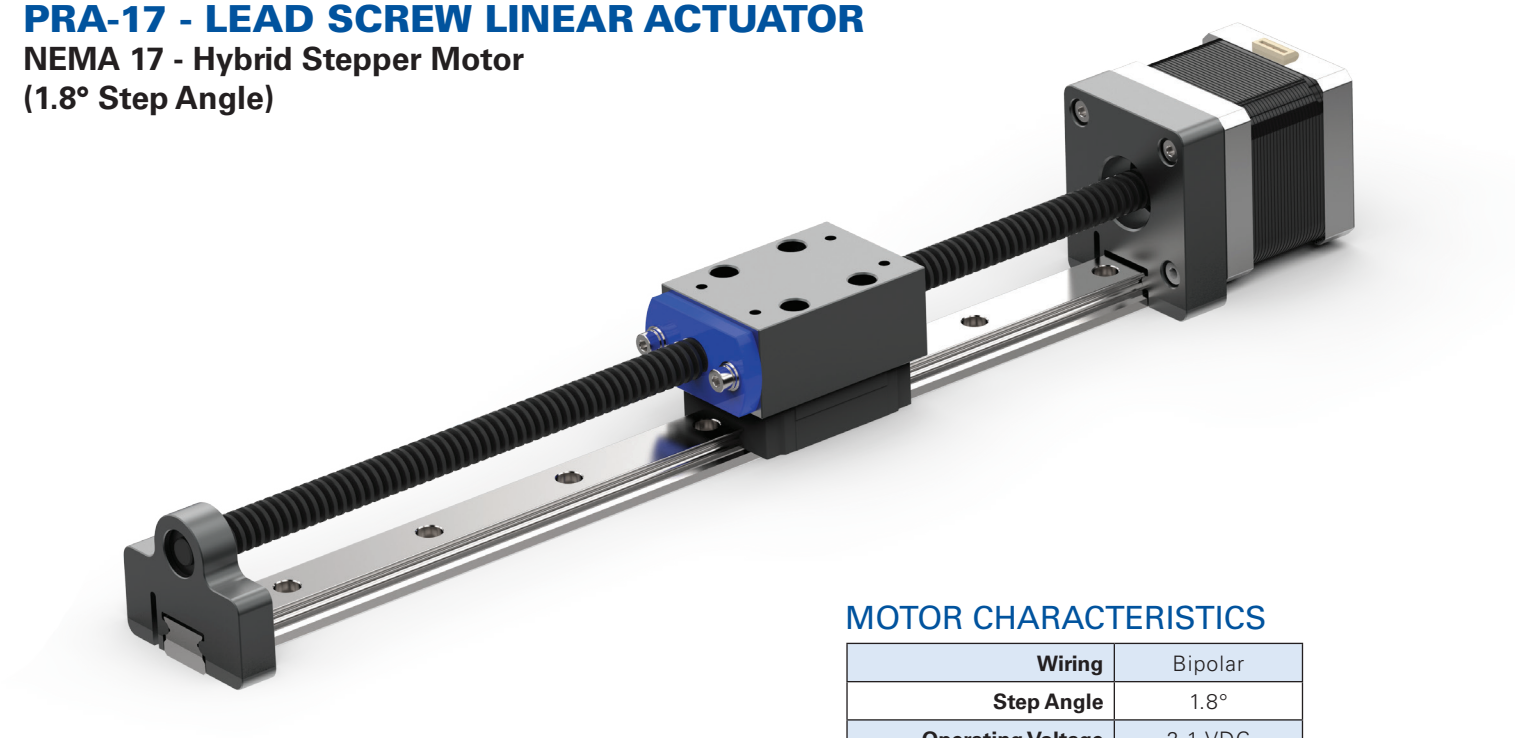

AVAILABLE LEAD SCREWS

Model	Screw Diameter	Lead	Pitch	Travel Per Step
PRA-17-050	0.375	0.050	0.050	0.000250
PRA-17-078	0.375	0.078	0.078	0.000390
PRA-17-100	0.375	0.100	0.100	0.000500
PRA-17-157	0.375	0.157	0.079	0.000785
PRA-17-196	0.375	0.196	0.039	0.000980
PRA-17-200	0.375	0.200	0.100	0.001000
PRA-17-250	0.375	0.250	0.063	0.001250
PRA-17-375	0.375	0.375	0.094	0.001875
PRA-17-400	0.375	0.400	0.100	0.002000
PRA-17-472	0.375	0.472	0.094	0.002360
PRA-17-500	0.375	0.500	0.125	0.002500
PRA-17-750	0.375	0.750	0.063	0.003750
PRA-17-984	0.375	0.984	0.197	0.004920
PRA-17-999	0.375	1.000	0.200	0.005000
PRA-17-M31	0.375	1.200	0.200	0.006000

MOTOR CHARACTERISTICS

Wiring	Bipolar
Step Angle	1.8°
Operating Voltage	2.1 VDC
Current / Phase	1.7A
Resistance / Phase	1.2 Ω
Inductance / Phase	1.8 mH
Power Consumption	7 W
Temperature Rise	135° F
Weight	8.5 oz (241g)
Insulation Resistance	20 M Ω

WIRING DIAGRAM

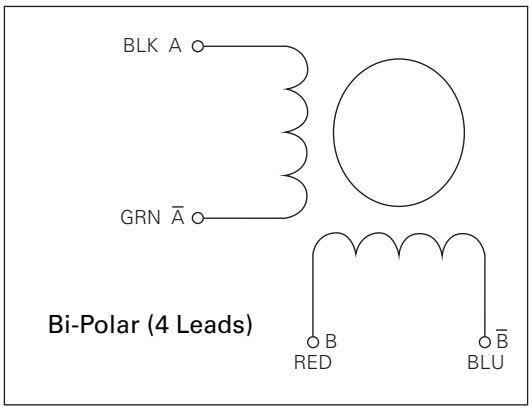

PRA-17 - SPECIFICATIONS

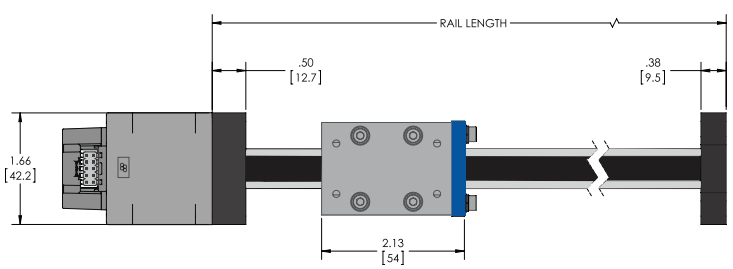

RAIL LENGTH = TRAVEL + 3.0"

RECOMMENDED OVERTRAVEL OF 10mm BE ADDED TO EACH END OF DESIRED STROKE WHEN USING STEPPER MOTOR

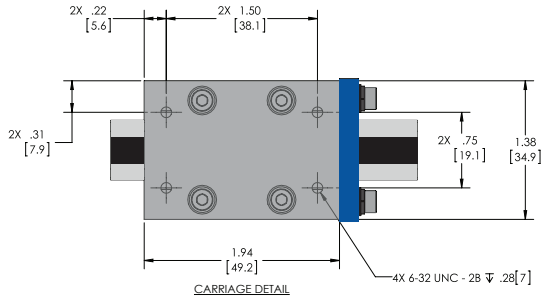

CARRIAGE DETAIL

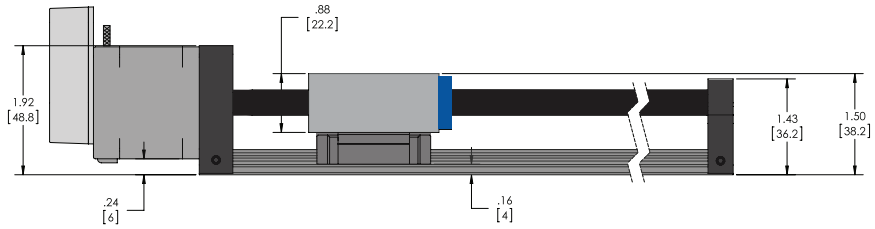

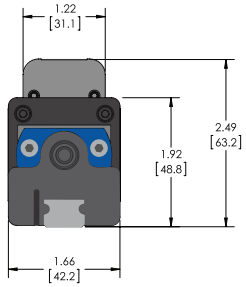

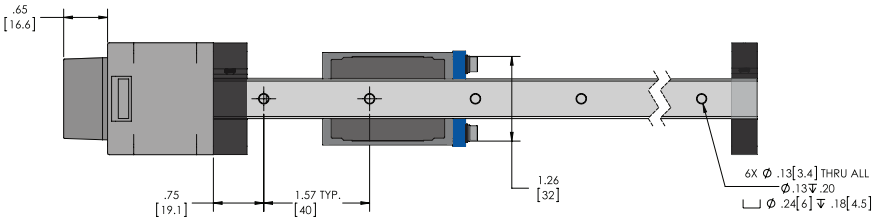

FORCE/SPEED CHARTS

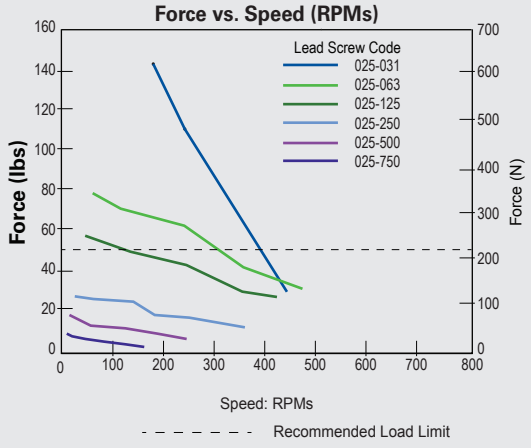

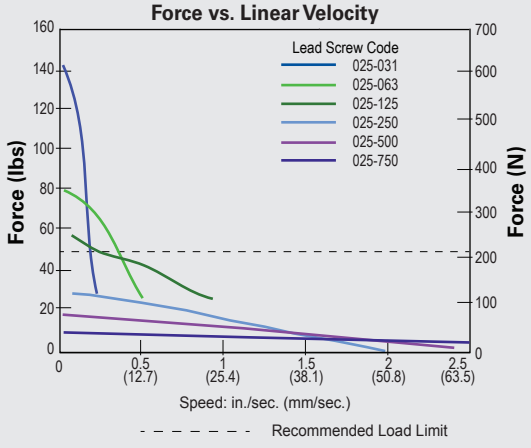

The specifications and data in this publication are believed to be accurate and reliable. However, it is the responsibility of the product user to determine the suitability of Helix products for a specific application. While defective products will be replaced without charge if promptly returned, no liability is assumed beyond such replacement.

2D/3D CAD ONLINE
helixlinear.com

PRA-23 - LEAD SCREW LINEAR ACTUATOR

NEMA 23 - Hybrid Stepper Motor
(1.8° Step Angle)

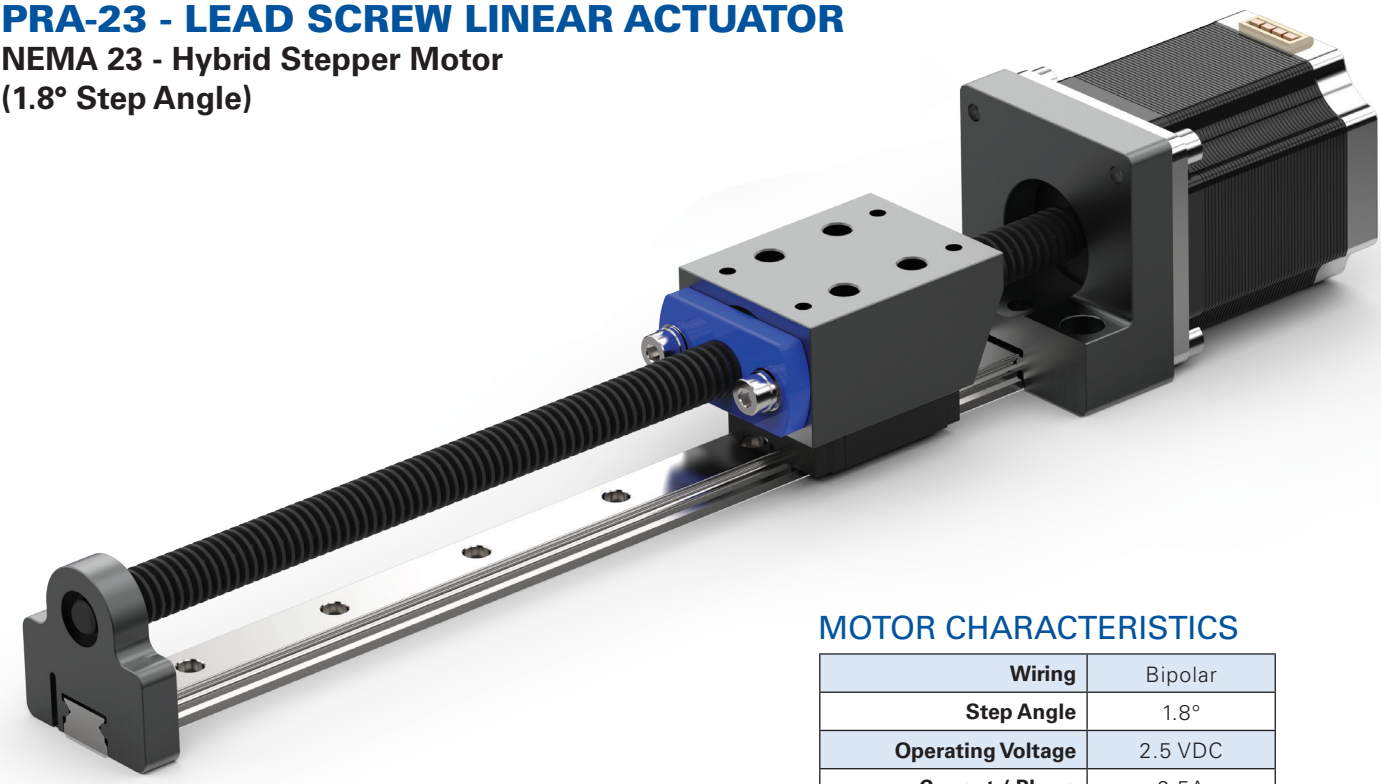

MOTOR CHARACTERISTICS

Wiring	Bipolar
Step Angle	1.8°
Operating Voltage	2.5 VDC
Current / Phase	2.5A
Resistance / Phase	1.0 Ω
Inductance / Phase	2.2 mH
Power Consumption	13 W
Temperature Rise	135° F
Weight	18 oz (511g)
Insulation Resistance	20 M Ω

AVAILABLE LEAD SCREWS

Model	Screw Diameter	Lead	Pitch	Travel Per Step
PRA-23-098	0.500	0.0980	0.0980	0.00049
PRA-23-100	0.500	0.1000	0.1000	0.00050
PRA-23-196	0.500	0.1960	0.0980	0.00098
PRA-23-200	0.500	0.2000	0.1000	0.00100
PRA-23-500	0.500	0.5000	0.1000	0.00250
PRA-23-630	0.500	0.6300	0.1575	0.00315
PRA-23-999	0.500	1.0000	0.1250	0.00500

WIRING DIAGRAM

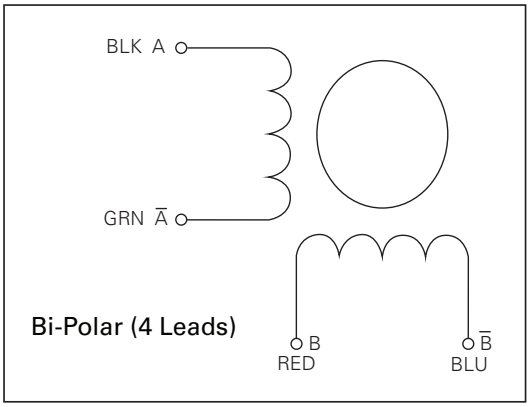

PRA-23 - SPECIFICATIONS

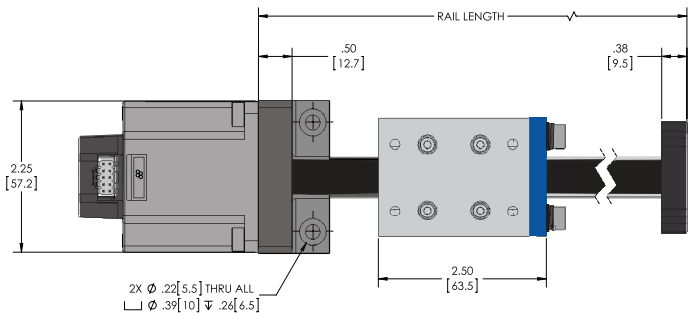

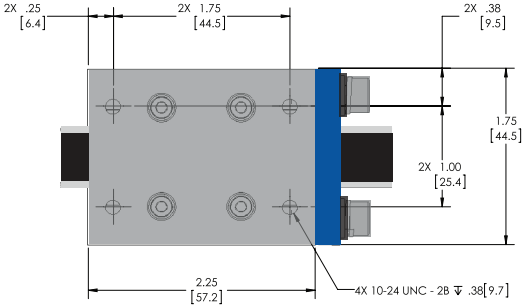

CARRIAGE DETAIL

RAIL LENGTH = TRAVEL + 3.7"

WE RECOMMEND AN OVERTRAVEL OF 10mm BE ADDED TO EACH END OF YOUR DESIRED STROKE WHEN USING A STEPPER MOTOR

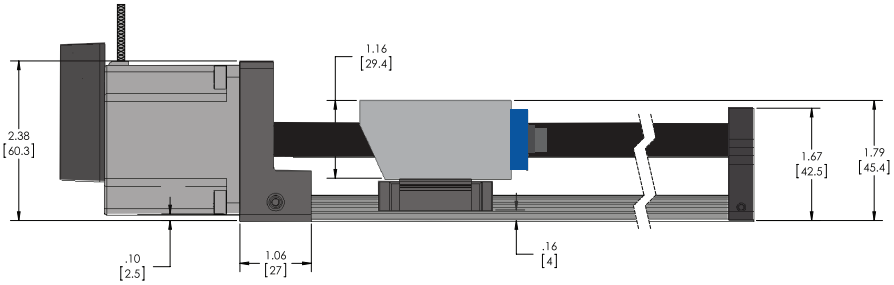

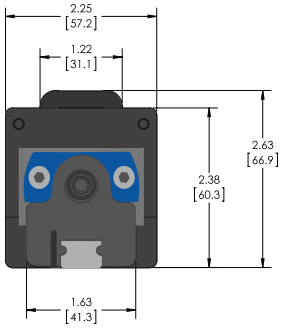

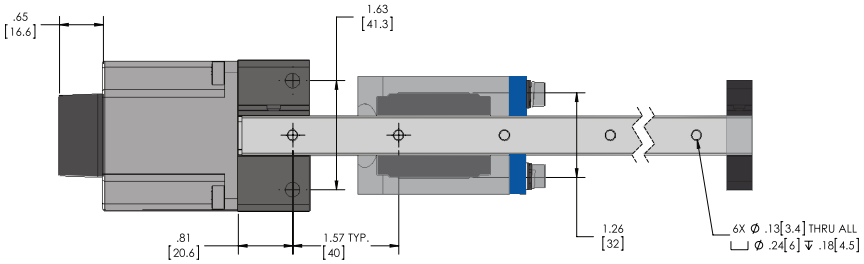

FORCE/SPEED CHARTS

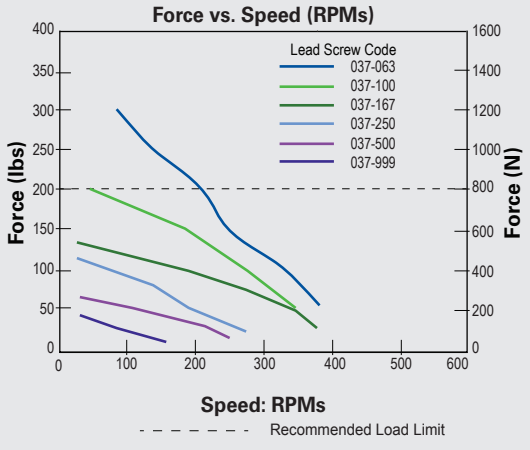

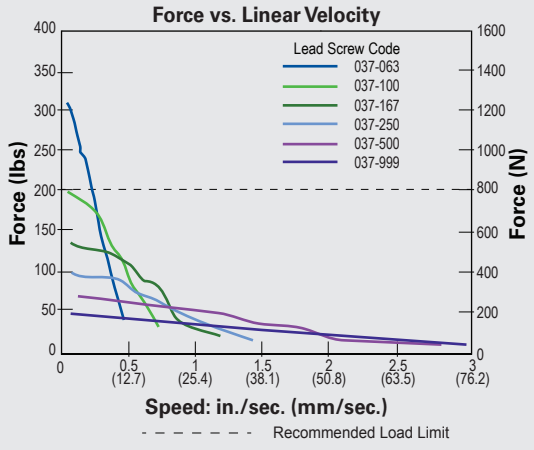

The specifications and data in this publication are believed to be accurate and reliable. However, it is the responsibility of the product user to determine the suitability of Helix products for a specific application. While defective products will be replaced without charge if promptly returned, no liability is assumed beyond such replacement.

PR LEAD SCREW LINEAR ACTUATOR

STEPPER MOTOR OPTIONS

- NEMA 8, 11, 17, 23
- Hybrid and bipolar motors
- 1.8 ° step angle
- Single, double, triple stack motors available
- Lead screws are integrated into the stepper motor to improve performance, reduce vibration and lower cost.

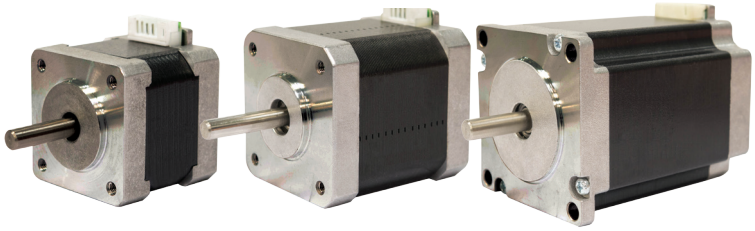

ENCODER OPTIONS

- Optical Rotary Encoders
- 32-5000 CPR available
- 128-20,000 pulses per revolution
- 2-channel quadrature TTL squareware outputs
- 5 pin or 10 pin latching connector

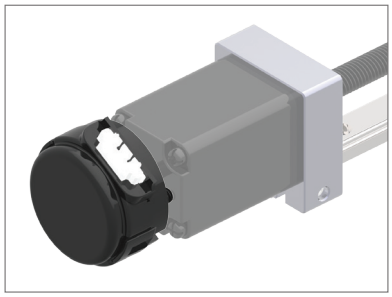

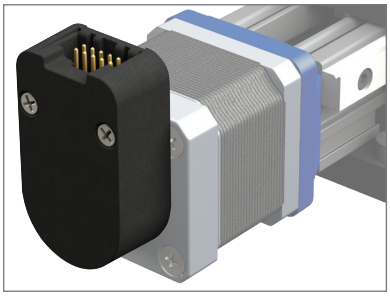

H4X™ PTFE COATING

- Durable - extends nut life 8-10X
- Clean - approved for food grade applications
- Resistant to solvents
- Clean-room approved
- Vacuum Rated Coating 10-6 Torr

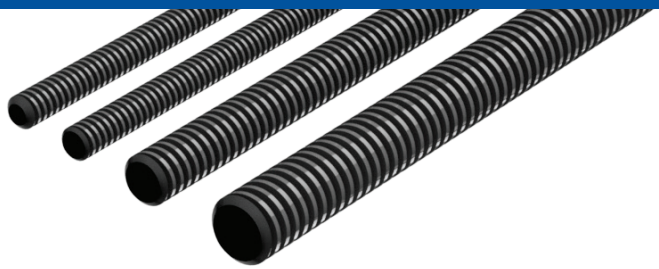

SCREW AND NUT OPTIONS

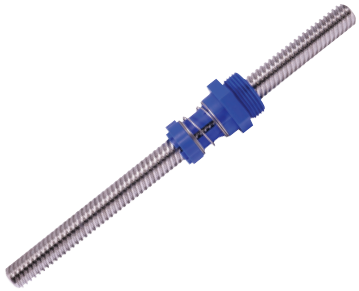

LEAD SCREW OPTIONS

- +/- 0.0003"/ inch lead accuracy (0.0001"/ inch available)
- 3/16", 1/4", 3/8", 1/2" diameter leads
- 300 stainless steel (alloy or aluminum screws available)
- Self-lubricating PTFE coated screws
- Twin-Lead™ screws with right and left hand threads available

AAB™ AXIAL ANTI-BACKLASH NUTS

- Low and high force springs available
- Self-adjusting anti-backlash design
- Smooth, Clean, Quiet motion
- Excellent repeatability
- Self-lubricating material

RAB™ RADIAL ANTI-BACKLASH NUTS

- Patent pending self-adjusting design
- Reduced torque design
- Self-lubricating material
- Greater rigidity

NEMA 8 HYBRID STEPPER MOTOR AND LINEAR POTENTIOMETER

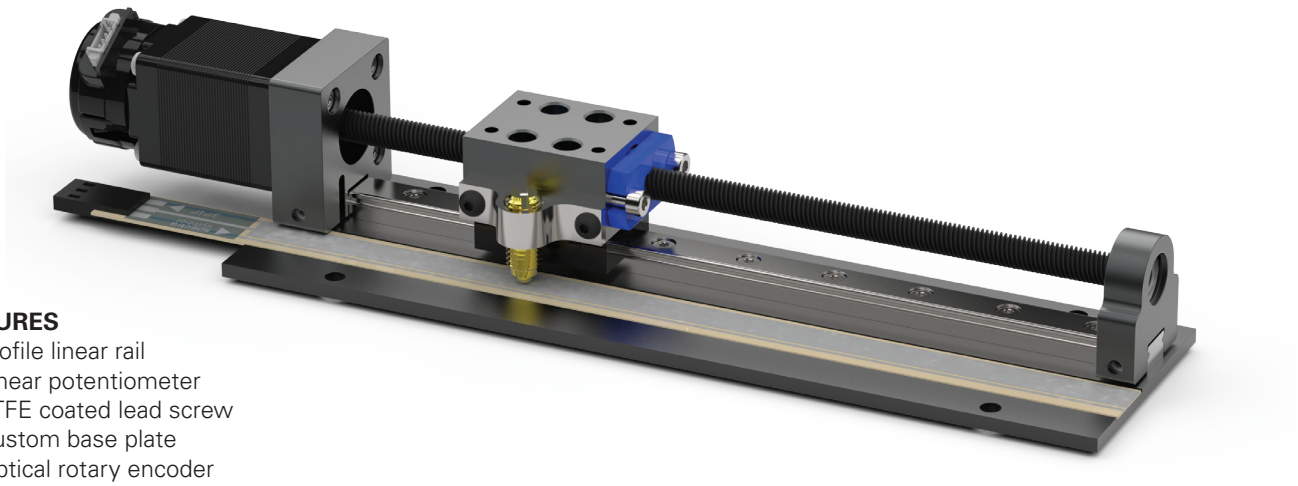

FEATURES

- Profile linear rail
- Linear potentiometer
- PTFE coated lead screw
- Custom base plate
- Optical rotary encoder

CUSTOM DESIGNS

NEMA 11 LINEAR ACTUATOR AND OPTICAL ROTARY ENCODER

FEATURES

- Custom carriage
- PTFE coated lead screws
- Profile linear rail
- Mounting surfaces on carriage for sensors and flags
- Encoder

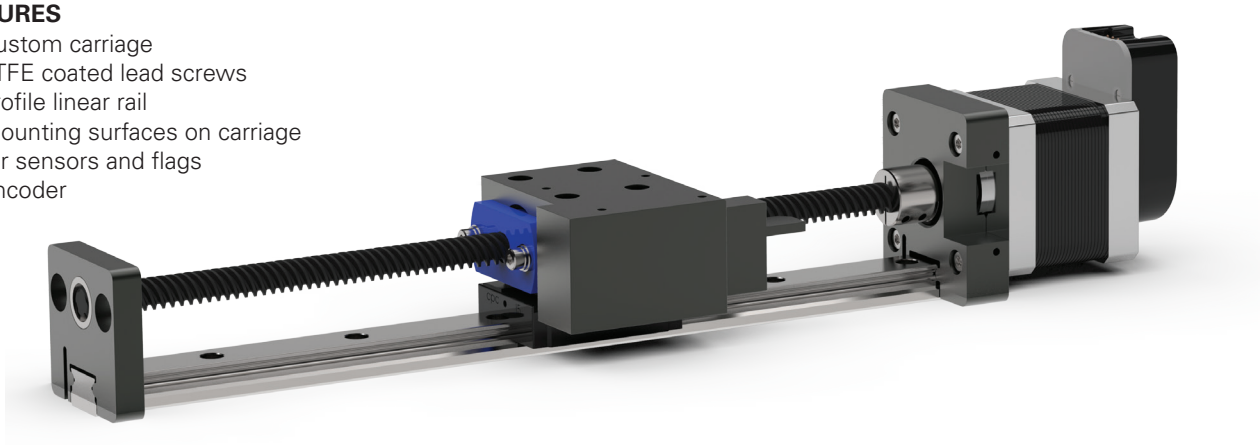

NEMA 17 CUSTOM LINEAR ACTUATOR

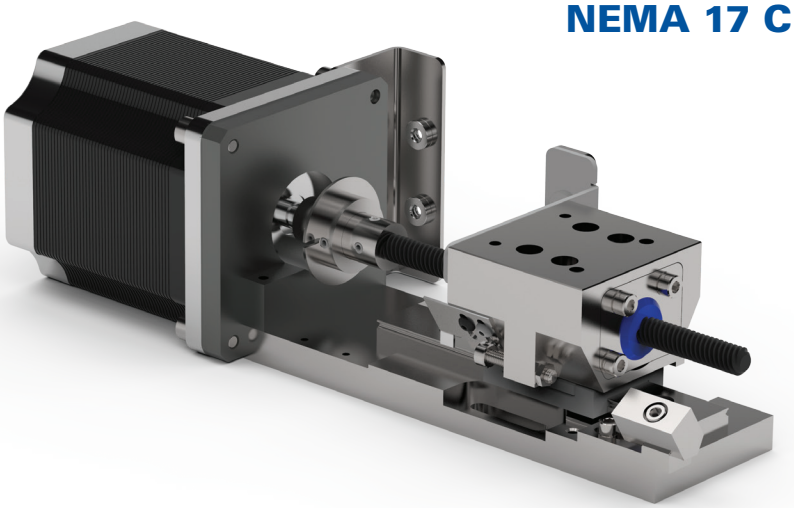

FEATURES

- Anti-backlash nut
- Clean room compatible
- Vacuum rated
- Mounting for flags and sensors

The specifications and data in this publication are believed to be accurate and reliable. However, it is the responsibility of the product user to determine the suitability of Helix products for a specific application. While defective products will be replaced without charge if promptly returned, no liability is assumed beyond such replacement.

Hybrid Stepper Motor
- NEMA 8, 11, 17, 23
- Single and double stack

Motor Mount

Precision Lead Screw
- +/- 0.0003”/inch lead accuracy
- PTFE Coating

Anti-backlash Nut
- Zero axial or radial lash
- Custom materials for extreme environments

Ball Rail Carriage

Heavy-Duty Sealed Ball-Bearing for Radial Support

End Support Plate

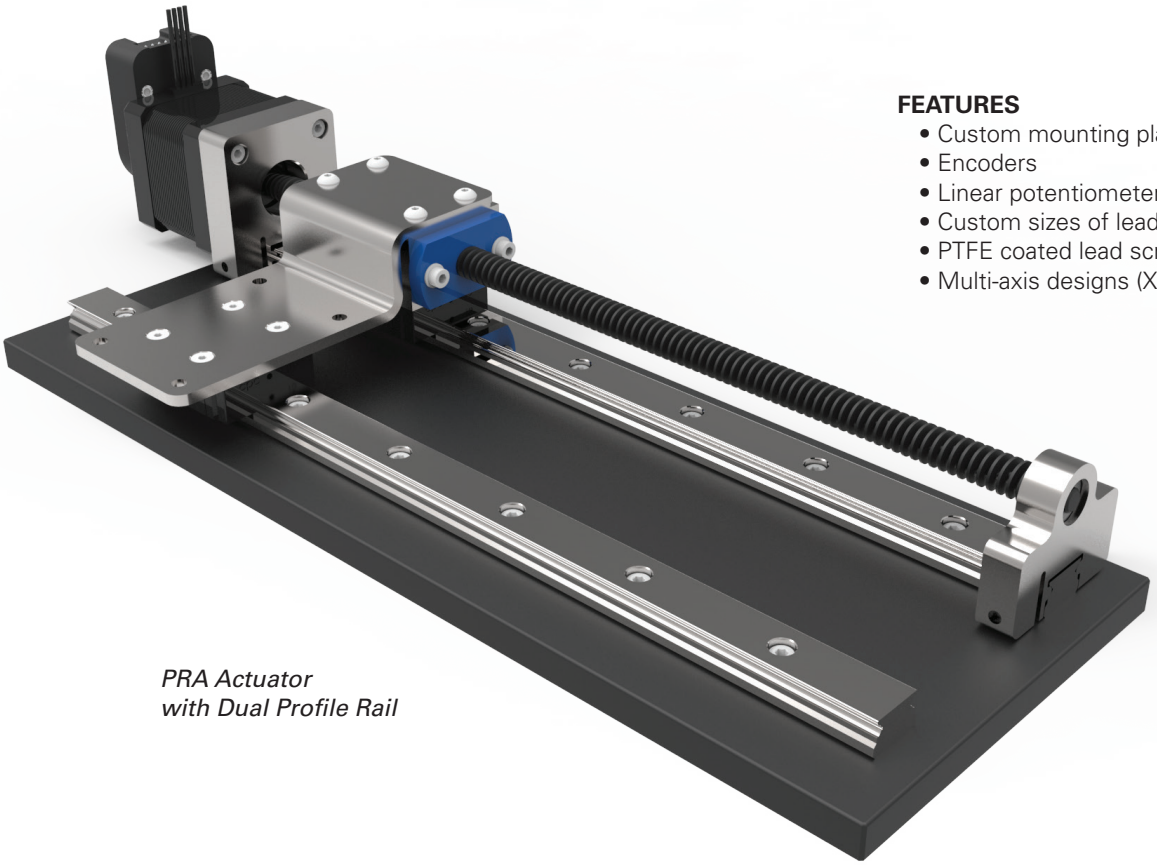

PRA Actuator
with Dual Profile Rail

FEATURES

- Custom mounting plate
- Encoders
- Linear potentiometers
- Custom sizes of lead screws
- PTFE coated lead screws
- Multi-axis designs (X-Y-Z)

Micro Precision Actuators

FEATURES

- Multi-axis designs (X-Y-Z)
- Hybrid stepper motors; NEMA 11, 17, 23
- PTFE coated lead screws
- Custom motors available

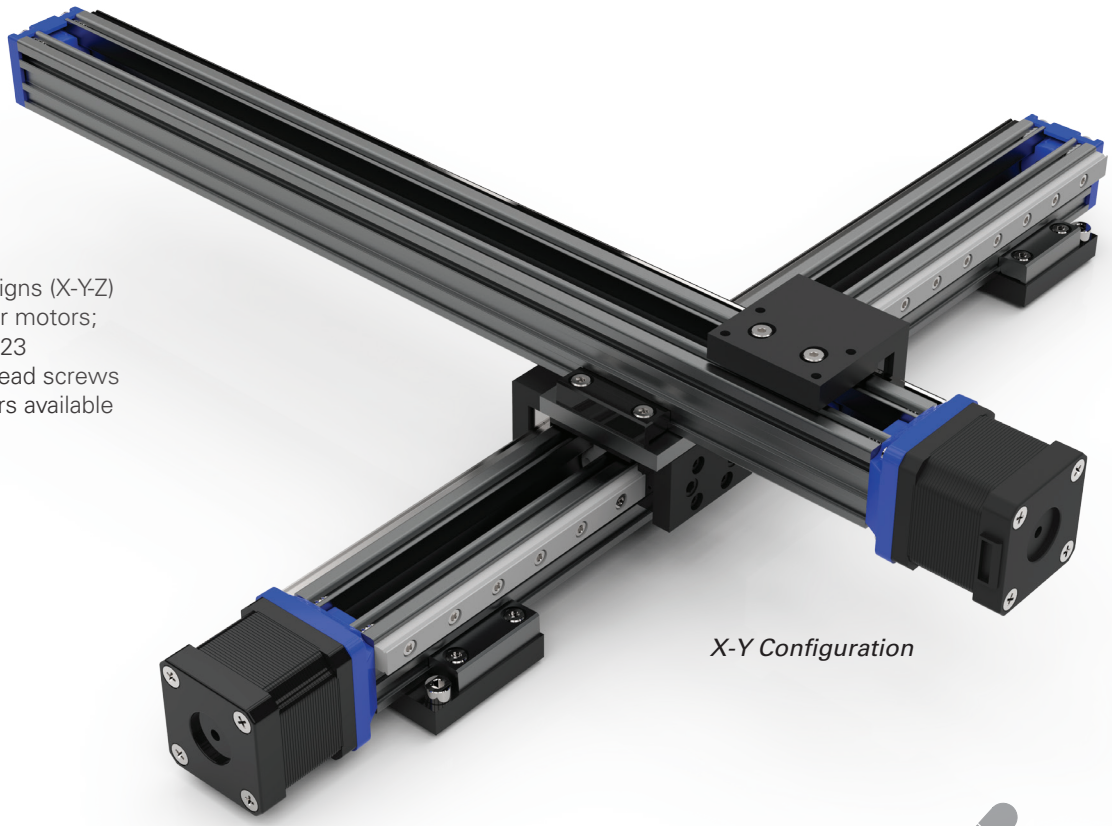

X-Y Configuration

The specifications and data in this publication are believed to be accurate and reliable. However, it is the responsibility of the product user to determine the suitability of Helix products for a specific application. While defective products will be replaced without charge if promptly returned, no liability is assumed beyond such replacement.

PERFORMANCE CHARTS

BASIC SYSTEM PROPERTIES		
Max Velocity, no lube, continuous motion	m/s	3 (requires lubrication)
Max Velocity, intermittent motion	m/s	5.5 (requires lubrication)
Max Acceleration**	m/s^2	250
Stroke Length (min recommended – max)**	mm	5 - 440
Normal Operating Temperatures (min - max)	°C	0° - 80°C
Max Drive (input) Speed	rpm	2000
Standard Lead Screw Accuracy	ISO Class 10 (± .21 mm/300 mm)	
Carriage Weight (including four SHCS)	Kg	0.115

STATIC AND DYNAMIC SYSTEM PROPERTIES			
Max Static Load* (Supported Rail) Carriage Capacity Only	Fx	N	25
	Fy		5,590
	Fz (Normal)		5,590
	Fz (Inverted)		5,590
Max Dynamic Load of System* (For PBC supplied motor, refer to charts below)	Fx	N	25
	Fy		2,500
	Fz (Normal)		2,500
	Fz (Inverted)		2,500

CARRIAGE LOADS

PRA-8

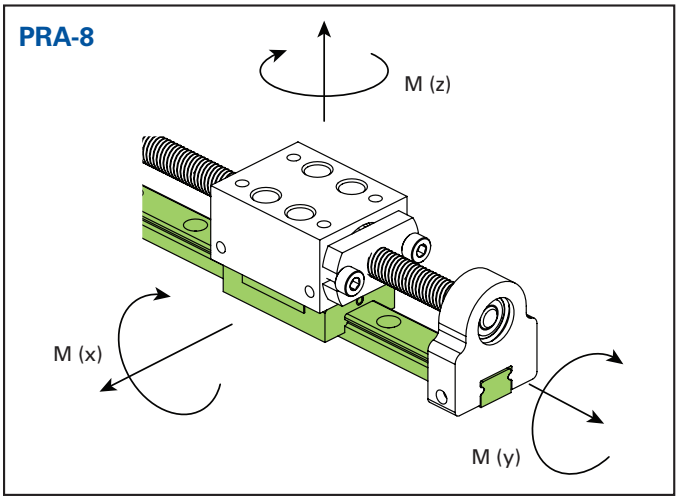

PRA-11,17, 23

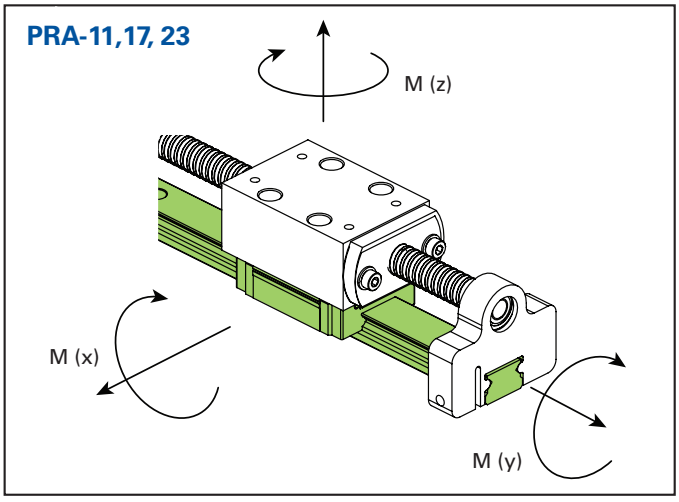

	X	Y	Z	Normal Load
PRA-8	Mx = 3.5 lb/in	Mz = 3.5 lb/in	Mz = 5.3 lb/in	Mx = 890 lb/in
PRA-11, 17, 23	Mx = 238.9 lb/in	Mz = 238.9 lb/in	Mz = 38.5 lb/in	Mz = 3.810 lb/in

**The above loads are MAX values. Consult our Application Engineers for more information.*

BUCKLING COLUMN LOAD CURVES

PRA-8 (3/16" diameter screw)

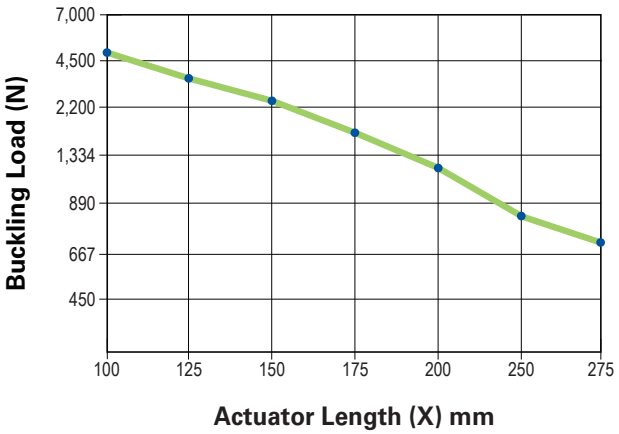

PRA-11 (1/4" diameter screw)

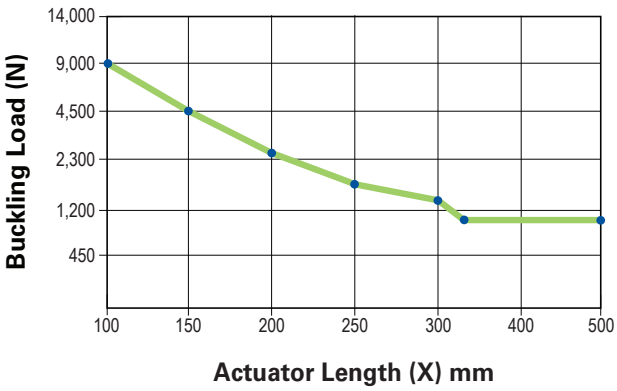

PRA-17 (3/8" diameter screw)

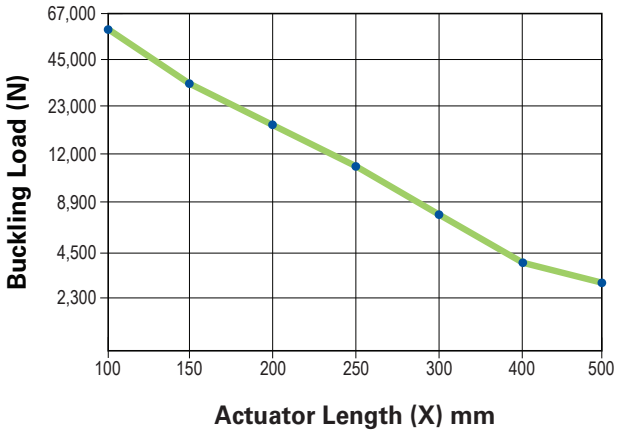

PRA-23 (1/2" diameter screw)

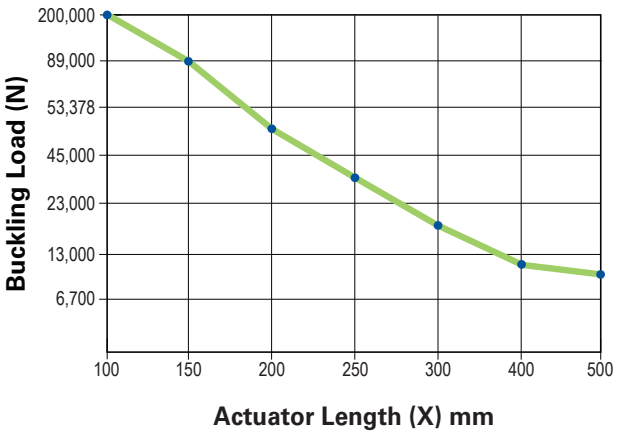

ACTUATOR LENGTH

(Distance between motor face and end support)

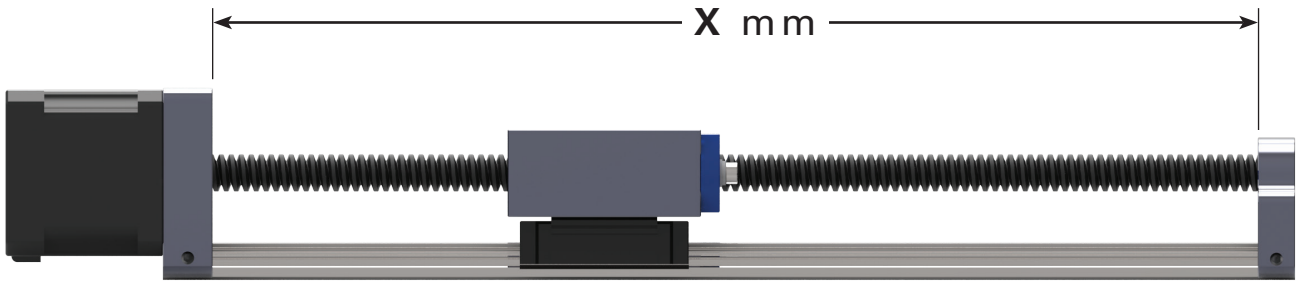

The specifications and data in this publication are believed to be accurate and reliable. However, it is the responsibility of the product user to determine the suitability of Helix products for a specific application. While defective products will be replaced without charge if promptly returned, no liability is assumed beyond such replacement.

LINEAR MOTION APPLICATIONS

High Quality, Precision Linear Motion Solutions

LIFE SCIENCES

- Pipeting automation
- Syringe pumps
- Microscopes
- MRI scanners
- CT scanners
- Radiographic machines
- In-vitro diagnostics
- Genomics
- Blood gas chemistry

PRINTING & BINDING

- "Z" axis actuators
- Multi-axis gantries
- 3D printing
- Automation / Material handling
- Additive manufacturing (AD)
- Large format sign printing
- Digital offset printing process
- Folding and sealing equipment
- Thermal CTP systems

SECURITY - MILITARY

- Automated door locking systems
- Pan-tilt-zoom cameras
- Automated gates
- Tactical automated security cameras
- Missle fin actuation
- Tank sighting systems
- Drones and UAVs
- Torpedo fin actuation
- Guided munitions

SEMICONDUCTOR

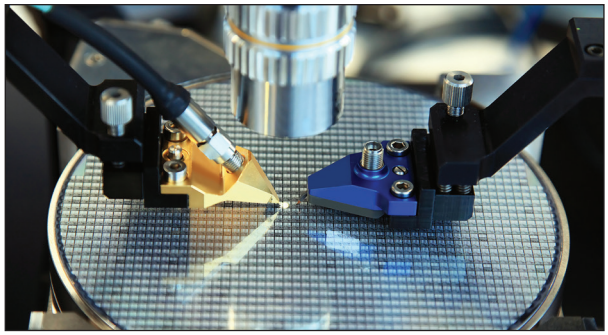

- Burnishing stages
- Stacking systems
- Vision inspection machines
- X, Y, Z gantries
- Wafer elevators / Wafer handling
- Acoustic microscopes
- Ultrasonic imaging
- Tuning coils
- Vacuum chamber doors

HELIX™ LINEAR TECHNOLOGIES

helixlinear.com

23200 Commerce Park Road | Beachwood, OH 44122 USA | 216-485-2232 or 1-855-435-4958 | email: sales@helixlinear.com