HELIX™
LINEAR TECHNOLOGIES

HYBRID LINEAR ACTUATORS

High Performance Stepper Motor Linear Actuators

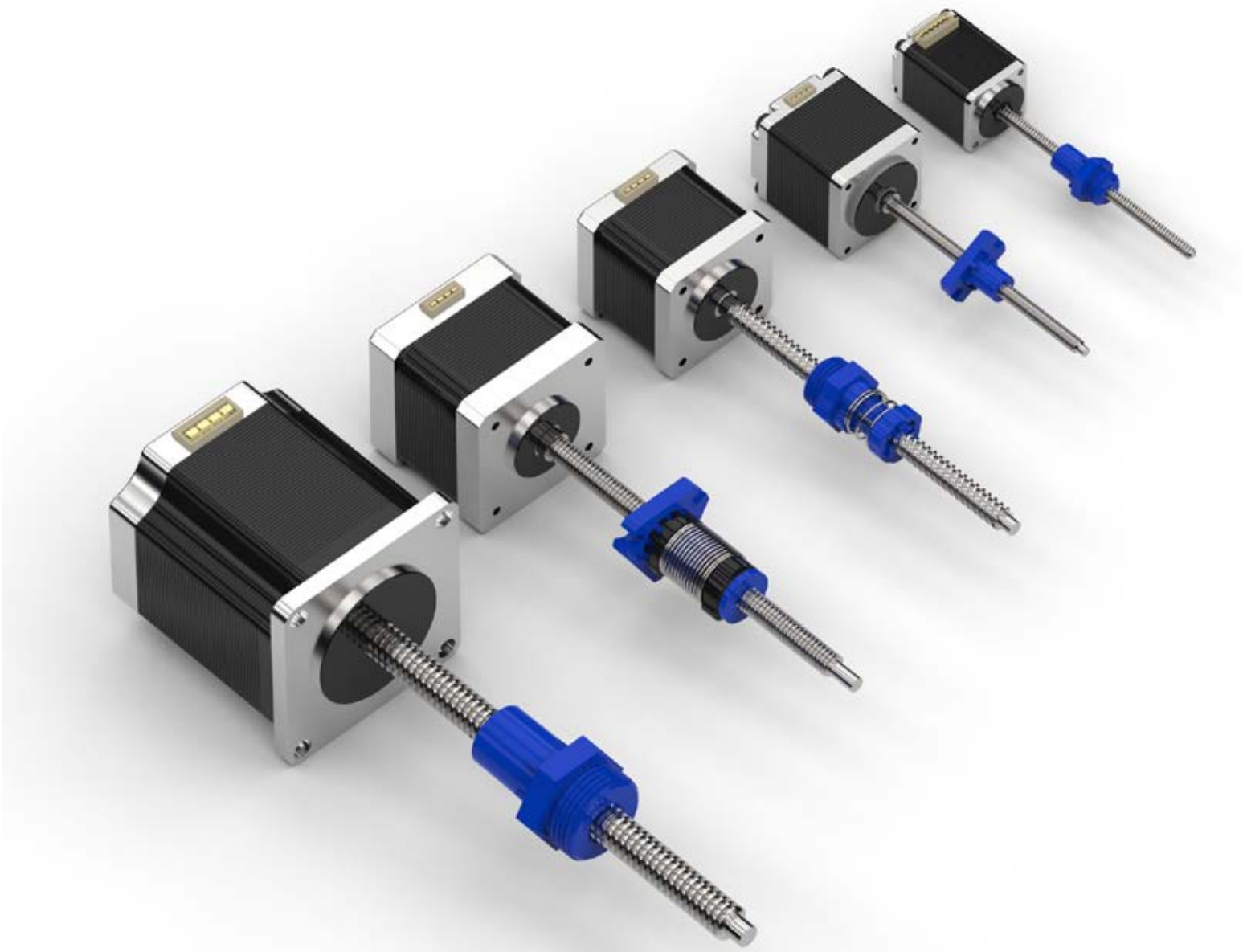

ITAR International Traffic in Arms Regulations Compliant

ISO 9001:2015 registered

helixlinear.com

HELIX™
LINEAR TECHNOLOGIES

Helix Linear Technologies, Inc., Beachwood, Ohio

COMPANY

Helix is a global supplier to the Medical Device, Life Science, Security, Semiconductor, Aerospace, Electromechanical and Defense industries. Helix leads the linear motion industry by manufacturing the highest quality linear actuation solutions in the world. We focus entirely on manufacturing electromechanical actuation systems that help our customer be more productive and profitable. Our execution of innovative product designs solves real problems for our customers and builds a foundation for long term success.

HISTORY

Helix was founded in 2011 to manufacture high-quality lead screws for the growing electromechanical actuation industry. Helix's rapid growth has included the addition of linear actuator solutions to deliver integrated and turnkey solutions.

CULTURE

Our culture is based on a team of smart, happy and competitive professionals focused on manufacturing innovative products centered on delivering precise electromechanical linear motion solutions. We are in the people business, as well as the product business. People make and sell our products and a team of smart, happy and competitive people make a company healthy.

OPERATIONS

Our company is built to deliver high-quality products and engineering support to solve the most demanding linear motion applications in any industry. We deliver components and subsystem solutions to high volume OEMs and custom machine builders to help secure their success.

TABLE OF CONTENTS

Hybrid Motor Actuators

Nema 8, 11, 14, 17, 23

6

Lead Screw Options and End Machining

Each hybrid linear actuator is available with standard sizes of precision lead screws. Custom sizes are easily integrated.

16-17

Motor Specifications

High-performance hybrid stepper motors are used to build each precision actuator. Custom sizes are readily available.

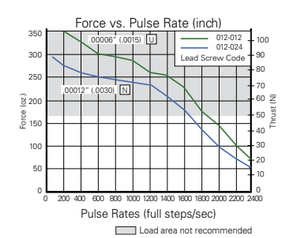

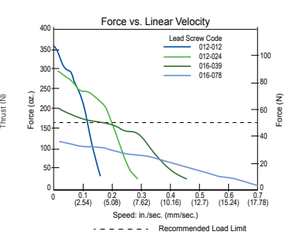

18

COMPANY OVERVIEW	2
ORDERING GUIDE	4
PRODUCT SUMMARY	5
NEMA 8 LINEAR ACTUATOR	6-7
NEMA 11 LINEAR ACTUATOR	8-9
NEMA 14 LINEAR ACTUATOR	10-11
NEMA 17 LINEAR ACTUATOR	12-13
NEMA 23 LINEAR ACTUATOR	14-15
LEAD SCREW OPTIONS	16
LEAD SCREW MACHINING	17
CUSTOM SOLUTIONS	18
EZZE-MOUNT™ BEARING SUPPORTS	19
MOTOR / ELECTRICAL SPECIFICATIONS	20
GLOSSARY & DEFINITIONS	21
QUALITY SYSTEM	22-23

Helix hybrid stepper motor actuators feature heavy duty ball bearings to maximize their thrust. Helix lead screws are securely laser welded into the motor's rotor to minimize backlash and provide years of dependable life. Bipolar for more power and unipolar windings are available, both providing quiet and smooth operation with your drive. Helix can also provide a high performance drive for your application. Optional accessories available are connectors, wire harnesses, encoders and custom lead nuts.

HYBRID STEPPER MOTOR ACTUATOR ORDERING GUIDE

SMA	-	8	S	E	-	012-025	NFA	-	8	-	P1	-	M1	-	E 200	-	A
Series		Series Model	Motor Length	Actuator Style		Lead Screw	Nut Style		Lead Screw Length		Lead Screw Precision		Bearing Support		Encoder		Encoder Position
SMA Stepper Motor Actuator		8	S Single Stack Motor	E Rotating Screw		See Lead Screw Table on Page 16	NTA Standard Freewheeling Nut /Threaded Mount		Length (inch) example: 8.00		P1 0.0003" / Inch		M1 Universal Mount Single Bearing		E 200 200 CPR		A
		11					NFA Standard Freewheeling Nut / Flanged Mount								E 500 500 CPR		
			D Double Stack Motor				ATA Anti-Backlash Nut / Threaded Mount										
		14					AFA Anti-Backlash Nut / Flanged Mount										
							RTA Anti-Backlash Nut / Threaded Mount								E1000 1000 CPR		
		17					RFA Anti-Backlash Nut / Flanged Mount				P2 0.0001" / Inch		F1 Flanged Mount Single Bearing				B
			T Triple Stack Motor				KTA Anti-Backlash Nut / Threaded Mount										
		23					KFA Anti-Backlash Nut / Flanged Mount								E2000 2000 CPR		

FINAL PART NAME: SMA - 8 - 012-025NFA - 8 - P1 - M1 - E200 - A

ENCODER POSITION DIAGRAM

NEMA Size 8

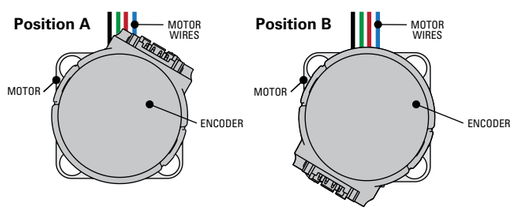

NEMA Sizes 11, 14, 17, 23

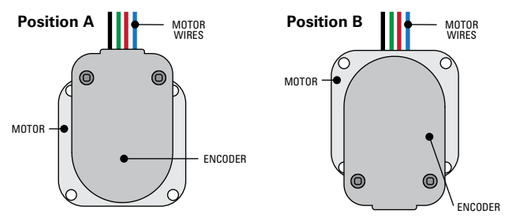

READY TO USE - RIGHT OUT OF THE BOX

PRE-ENGINEERED | ASSEMBLED | TESTED

Lead screws welded in motor shafts

PTFE dry lubricant on lead screws

The Broadest Selection of Linear Stepper Actuators

- Thousands of combinations of lead screws and lead screw nuts in stock
- No compromises of design and efficiency

Helix Linear Stepper Motors Are Precision Manufactured

- Peak performance
- Equipped with deep groove ball bearings
- Maximum thrust loads
- Long life
- Optional encoders and wiring harness are available

Proprietary Laser Welding Process

- Ensures strong bond between screw and motor
- Precision alignment
- Eliminates need for costly support bearing and coupling
- Provides maximum system stiffness

Lead Screws Are PTFE Coated in an In-house Computer Controlled Environment

- Uniform coating
- Long lasting, smooth operating life
- Ensures prompt delivery and total quality control
- Nuts are injection molded using the latest technology and materials

Rapid prototyping services, custom design actuators or a complete linear system.

If there is a need for a custom motor, motor harness, lead or diameter, special coating, different materials or a custom nut configuration, please contact Helix for more information.

SMA - 8

Size 8 - Hybrid Linear Actuator
(1.8° Step Angle)

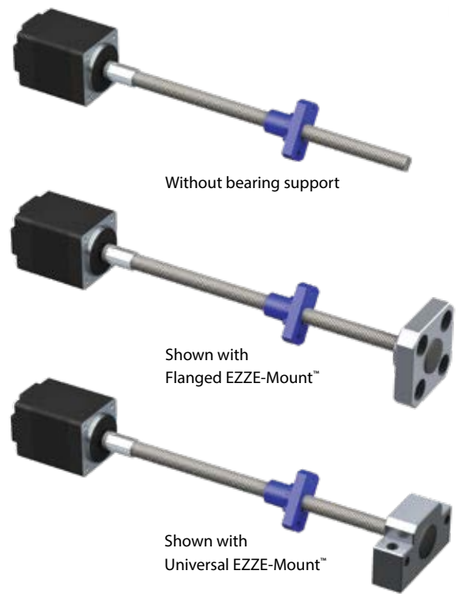

MOTOR CHARACTERISTICS

Wiring	Bipolar
Operating Voltage	5 VDC
Current / Phase	0.24 A
Resistance / Phase	20.4 Ω
Inductance / Phase	5.0 mH
Power Consumption	2.4 W
Temperature Rise	135° F
Weight	1.5 oz (43g)
Insulation Resistance	20 M Ω

SPEED CHARTS

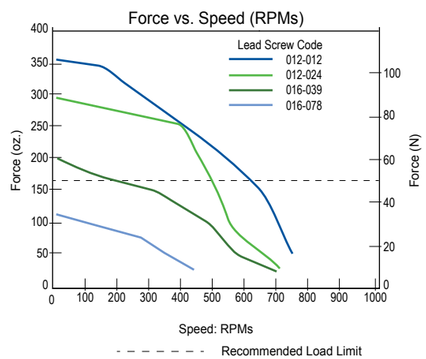

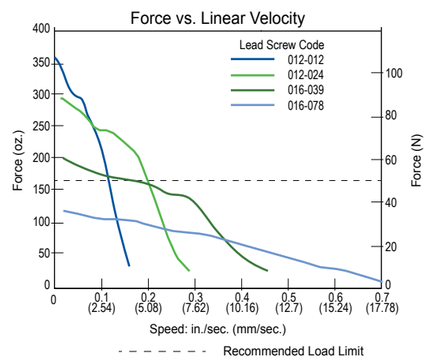

ROTATING SCREW / TRANSLATING NUT

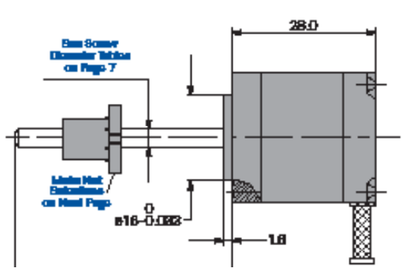

END VIEW

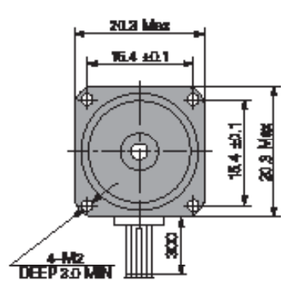

AVAILABLE LEAD SCREWS

Screw Diameter	Lead	Diameter / Lead Code	Travel Per Step
0.125″	0.0120″	012-012	0.00006000″
0.125″	0.0240″	012-024	0.00012000″
4.00mm	1.00mm	016-039	0.005mm
4.00mm	2.00mm	016-078	0.010mm
More sizes available - See Page 16			

WIRING DIAGRAM

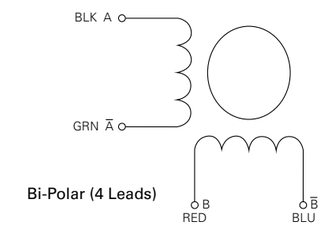

NTA - STANDARD THREADED NUT

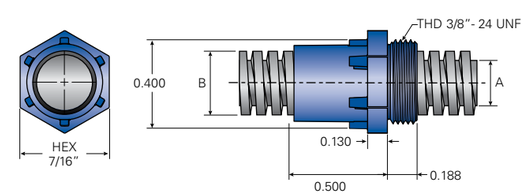

NFA - STANDARD FLANGED NUT

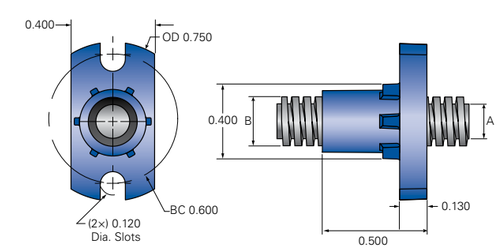

ATA - ANTI-BACKLASH THREADED NUT

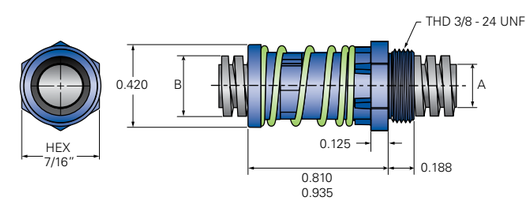

AFA - ANTI-BACKLASH FLANGED NUT

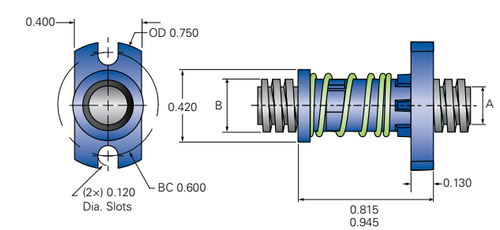

EZZE-MOUNTS™ - UNIVERSAL MOUNT

EZM-4002

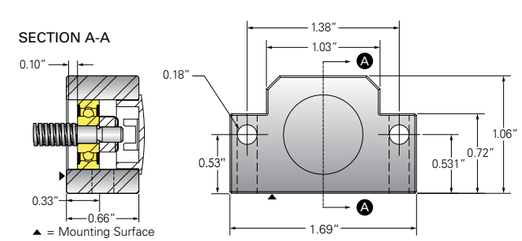

EZZE-MOUNTS™ - FLANGED

EZF-4002

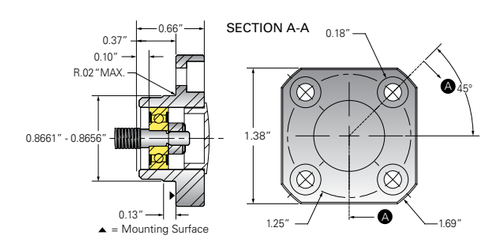

Note: Speed charts are based on using bi-polar motors with chopper drives at 100% duty cycle. Chopper drive curves were created using full steps on a 5 volt motor and a 40v power supply.

SMA - 11

Size 11 - Hybrid Linear Actuator
(1.8° Step Angle)

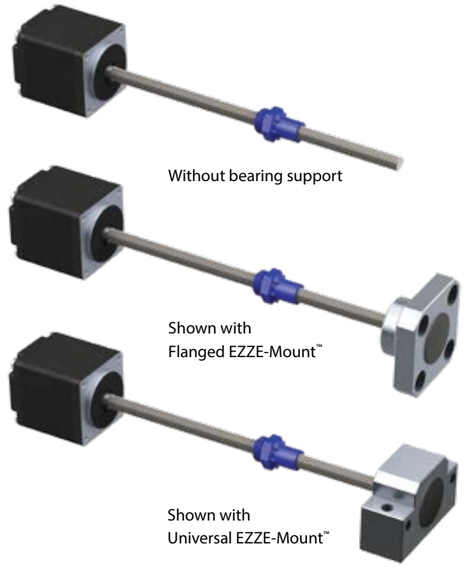

MOTOR CHARACTERISTICS

Wiring	Bipolar
Operating Voltage	5 VDC
Current / Phase	0.42 A
Resistance / Phase	11.9 Ω
Inductance / Phase	6.7 mH
Power Consumption	4.2 W
Temperature Rise	135° F
Weight	4.2oz (119g)
Insulation Resistance	20 M Ω

SPEED CHARTS

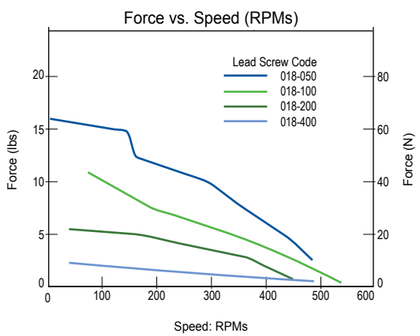

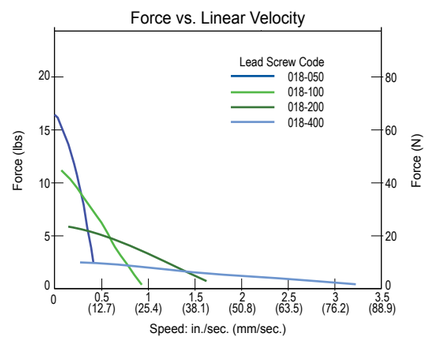

ROTATING SCREW / TRANSLATING NUT

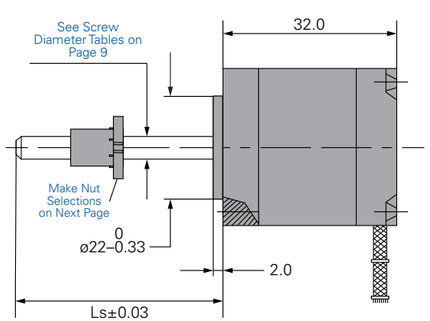

END VIEW

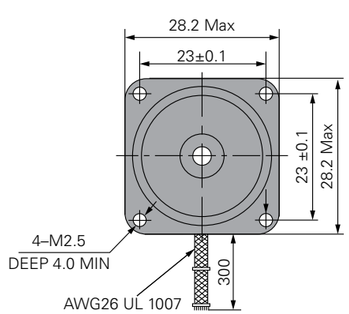

AVAILABLE LEAD SCREWS

Screw Diameter	Lead	Diameter / Lead Code	Travel Per Step
0.1875″	0.0500″	018-050	0.00025″
0.1875″	0.1000″	018-100	0.00050″
0.1875″	0.200″	018-200	0.0005″
0.1875″	0.400″	018-400	0.002″
More sizes available - See Page 16			

WIRING DIAGRAM

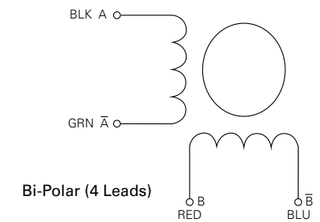

NTA - STANDARD THREADED NUT

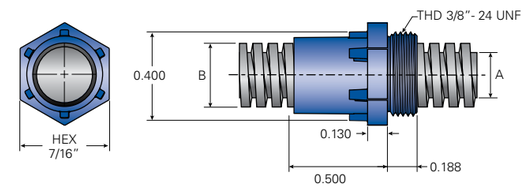

NFA - STANDARD FLANGED NUT

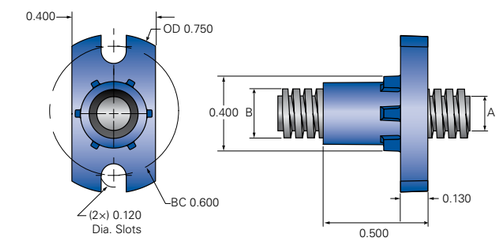

ATA - ANTI-BACKLASH THREADED NUT

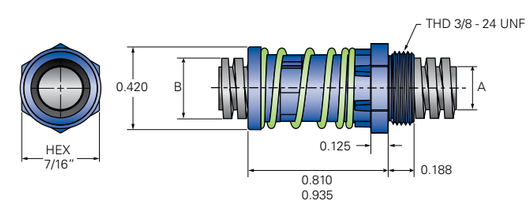

AFA - ANTI-BACKLASH FLANGED NUT

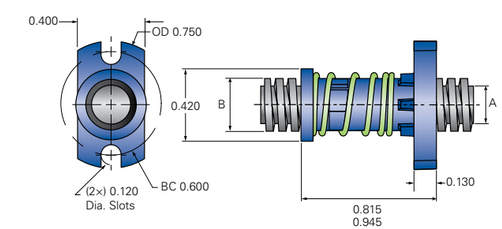

EZZE-MOUNTS™ - UNIVERSAL MOUNT

EZM-4004

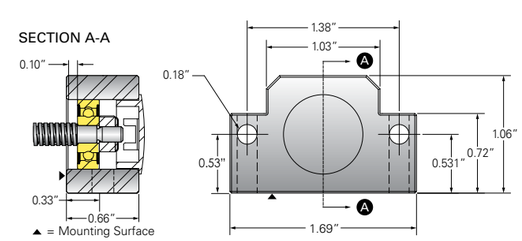

EZZE-MOUNTS™ - FLANGED

EZF-4004

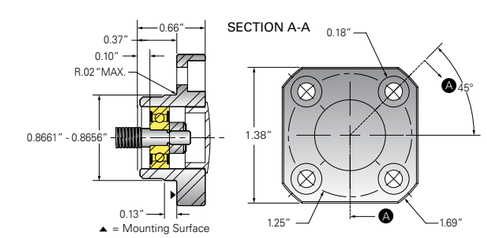

Note: Speed charts are based on using bi-polar motors with chopper drives at 100% duty cycle. Chopper drive curves were created using full steps on a 5 volt motor and a 40v power supply.

SMA - 14

Size 14 - Hybrid Linear Actuator
(1.8° Step Angle)

MOTOR CHARACTERISTICS

Wiring	Bipolar
Operating Voltage	5 VDC
Current / Phase	0.57 A
Resistance / Phase	8.8 Ω
Inductance / Phase	13 mH
Power Consumption	5.7 W
Temperature Rise	135° F
Weight	5.7 oz (162g)
Insulation Resistance	20 M Ω

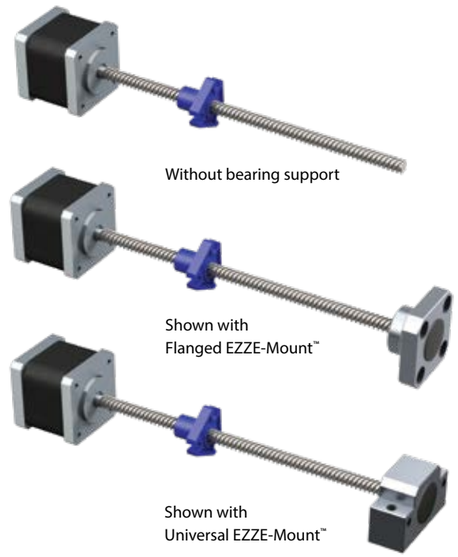

SPEED CHARTS

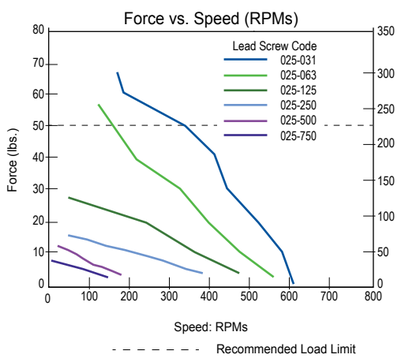

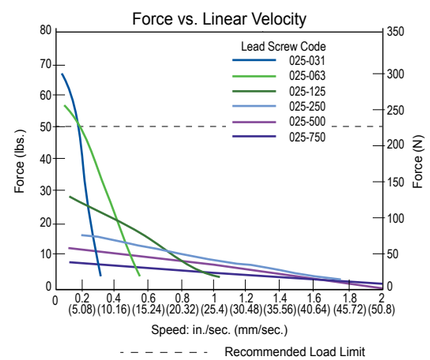

ROTATING SCREW / TRANSLATING NUT

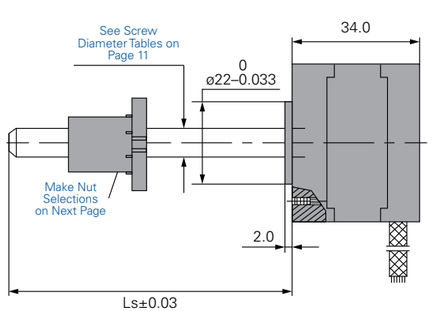

END VIEW

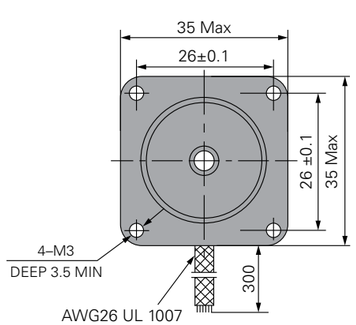

AVAILABLE LEAD SCREWS

Screw Diameter	Lead	Diameter / Lead Code	Travel Per Step
0.250″	0.0310″	025-031	0.00016″
0.250″	0.0630″	025-063	0.00032″
0.250″	0.1250″	025-125	0.00063″
0.250″	0.2500″	025-250	0.00125″
0.250″	0.5000″	025-500	0.00250″
0.250″	0.7500″	025-750	0.00375″
More sizes available - See Page 16			

WIRING DIAGRAM

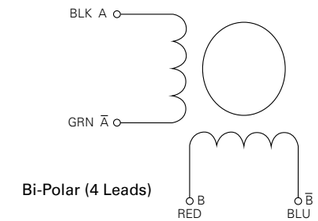

NTA - STANDARD THREADED NUT

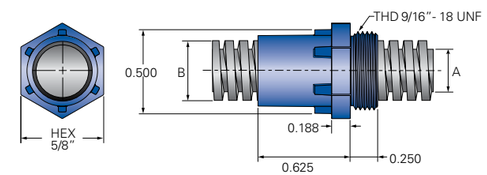

NFA - STANDARD FLANGED NUT

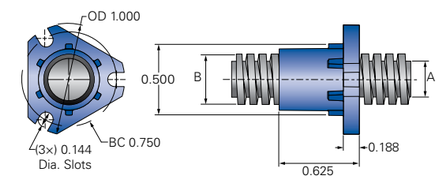

ATA - ANTI-BACKLASH THREADED NUT

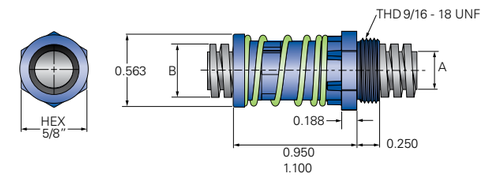

AFA - ANTI-BACKLASH FLANGED NUT

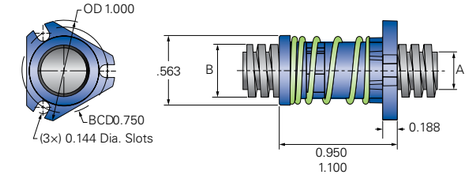

RTA - RADIAL ANTI-BACKLASH THREADED NUT

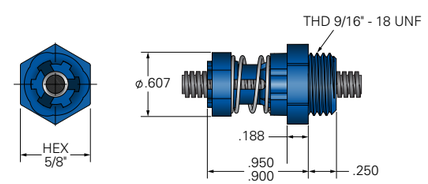

RFA - RADIAL ANTI-BACKLASH FLANGED NUT

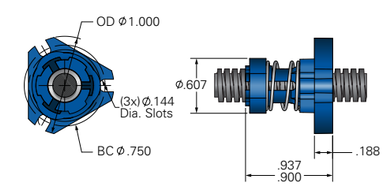

EZE-MOUNTS™ - UNIVERSAL MOUNT

EZM-4004

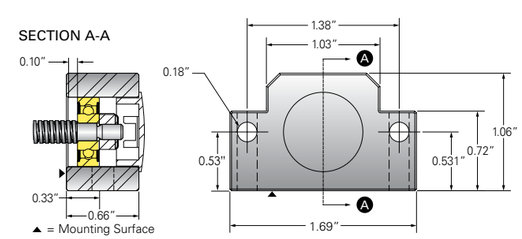

EZE-MOUNTS™ - FLANGED

EZF-4004

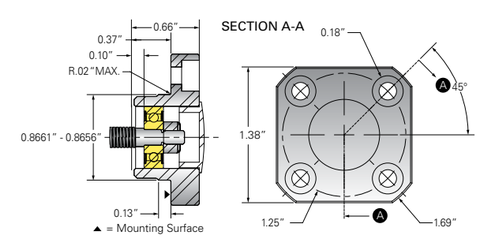

Note: Speed charts are based on using bi-polar motors with chopper drives at 100% duty cycle. Chopper drive curves were created using full steps on a 5 volt motor and a 40v power supply.

SMA - 17

Size 17 - Hybrid Linear Actuator
(1.8° Step Angle)

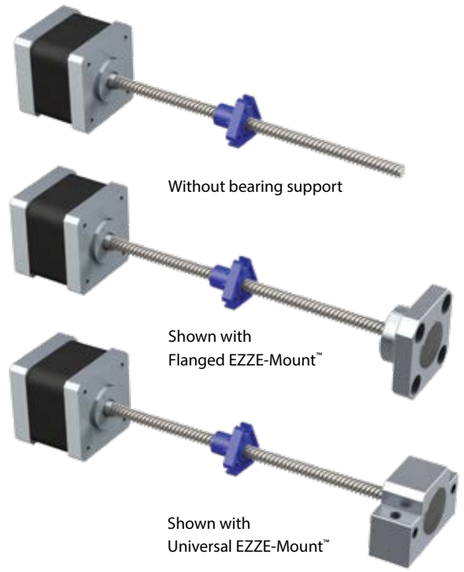

MOTOR CHARACTERISTICS

Wiring	Bipolar
Operating Voltage	2.1 VDC
Current / Phase	1.7A
Resistance / Phase	1.2 ohms
Inductance / Phase	1.8 mH
Power Consumption	7 W
Temperature Rise	135° F
Weight	8.5 oz (241g)
Insulation Resistance	20 M Ω

SPEED CHARTS

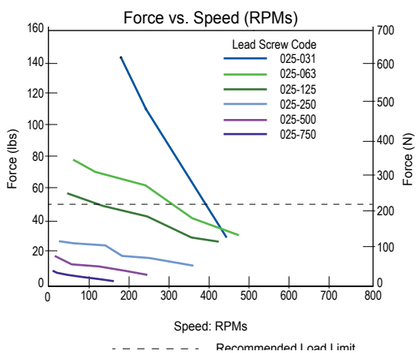

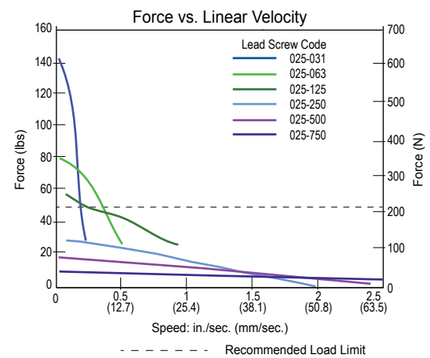

ROTATING SCREW / TRANSLATING NUT

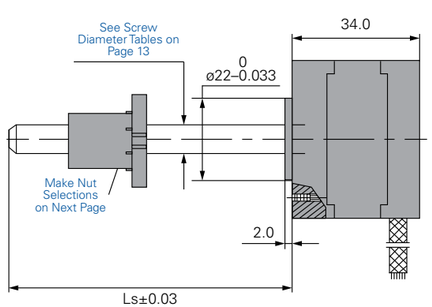

END VIEW

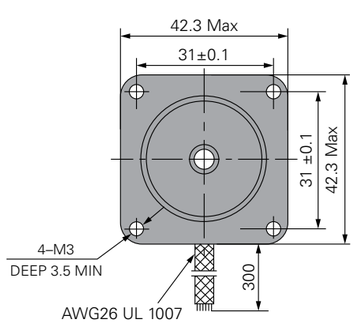

AVAILABLE LEAD SCREWS

Screw Diameter	Lead	Diameter / Lead Code	Travel Per Step
0.250″	0.0310″	025-031	0.00016″
0.250″	0.0630″	025-063	0.00032″
0.250″	0.1250″	025-125	0.00063″
0.250″	0.2500″	025-250	0.00125″
0.250″	0.5000″	025-500	0.00250″
0.250″	0.7500″	025-750	0.00375″
More sizes available - See Page 16			

WIRING DIAGRAM

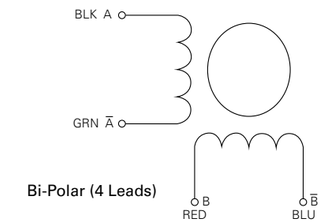

NTA - STANDARD THREADED NUT

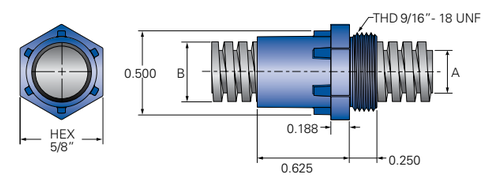

NFA - STANDARD FLANGED NUT

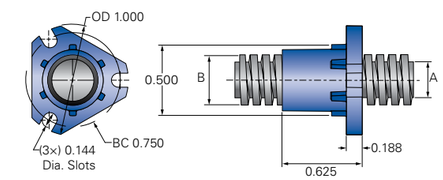

ATA - ANTI-BACKLASH THREADED NUT

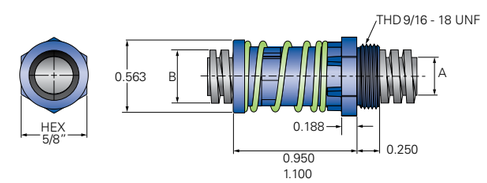

AFA - ANTI-BACKLASH FLANGED NUT

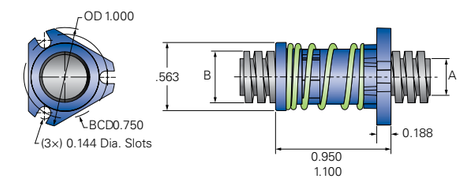

RTA - RADIAL ANTI-BACKLASH THREADED NUT

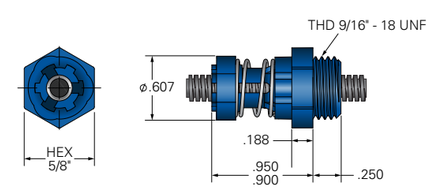

RFA - RADIAL ANTI-BACKLASH FLANGED NUT

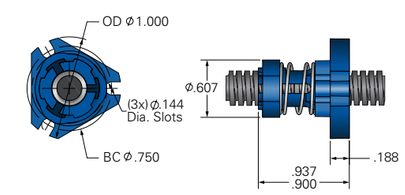

EZZE-MOUNTS™ - UNIVERSAL MOUNT

EZM-4004

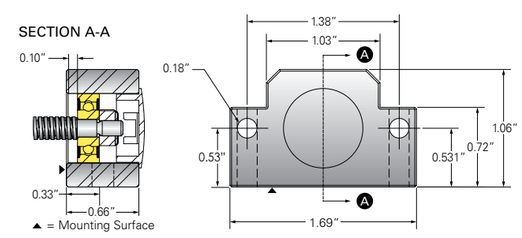

EZZE-MOUNTS™ - FLANGED

EZF-4004

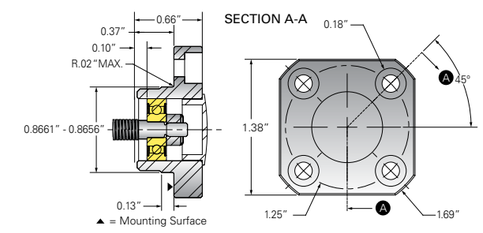

Note: Speed charts are based on using bi-polar motors with chopper drives at 100% duty cycle. Chopper drive curves were created using full steps on a 5 volt motor and a 40v power supply.

SMA - 23

Size 23 - Hybrid Linear Actuator
(1.8° Step Angle)

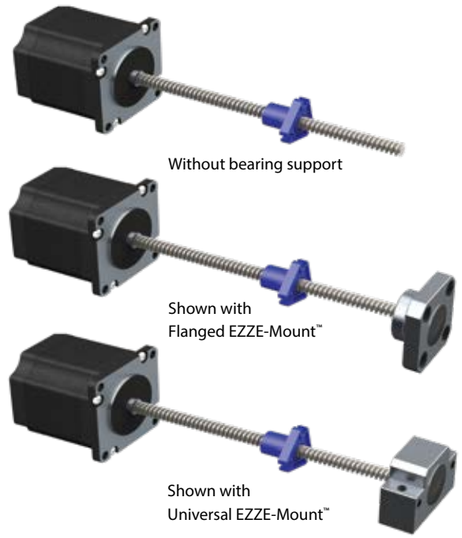

MOTOR CHARACTERISTICS

Wiring	Bipolar
Operating Voltage	2.5 VDC
Current / Phase	2.5A
Resistance / Phase	1.0 ohms
Inductance / Phase	2.2 mH
Power Consumption	13 W
Temperature Rise	135° F
Weight	18 oz (511g)
Insulation Resistance	20 M Ω

AVAILABLE LEAD SCREWS

Screw Diameter	Lead	Diameter / Lead Code	Travel Per Step
0.375″	0.0630″	037-063	0.00032″
0.375″	0.1000″	037-100	0.00050″
0.375″	0.1670″	037-167	0.00084″
0.375″	0.2500″	037-250	0.00125″
0.375″	0.5000″	037-500	0.00250″
0.375″	1.0000″	037-999	0.00500″
More sizes available - See Page 16			

WIRING DIAGRAM

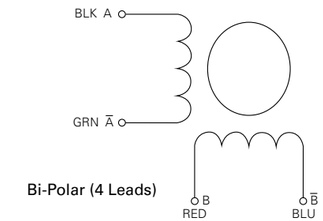

SPEED CHARTS

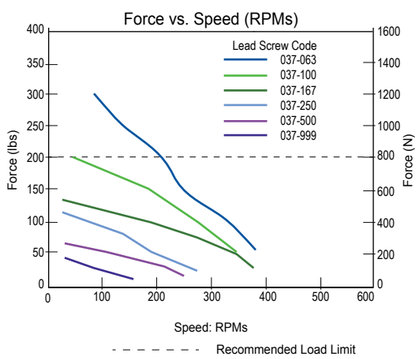

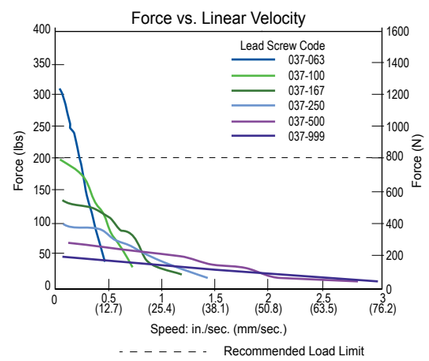

NTA - STANDARD THREADED NUT

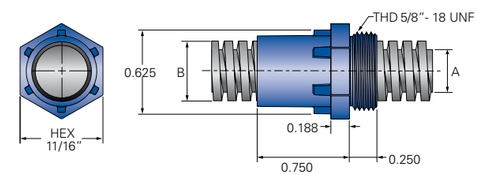

NFA - STANDARD FLANGED NUT

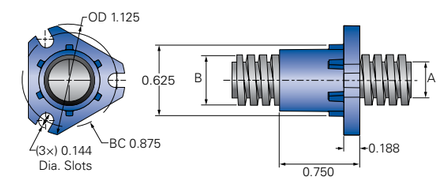

ATA - ANTI-BACKLASH THREADED NUT

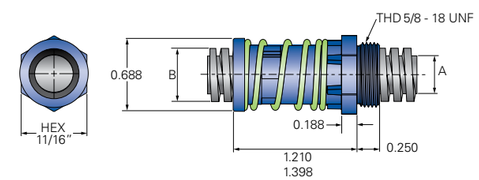

AFA - ANTI-BACKLASH FLANGED NUT

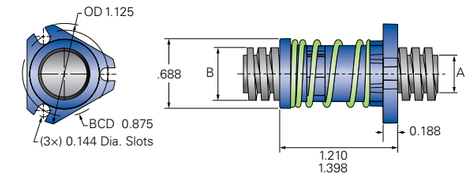

RTA - RADIAL ANTI-BACKLASH THREADED NUT

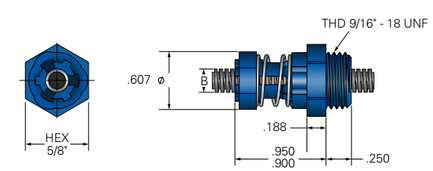

RFA - RADIAL ANTI-BACKLASH FLANGED NUT

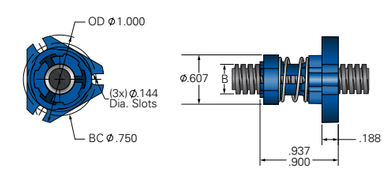

ROTATING SCREW / TRANSLATING NUT

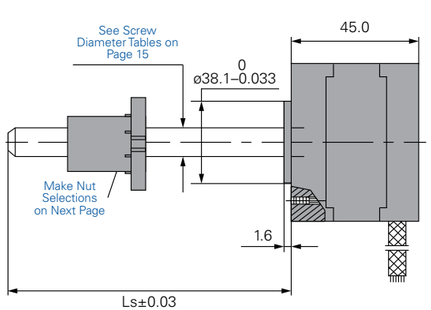

END VIEW

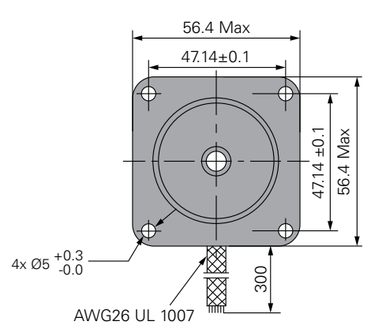

EZZE-MOUNTS™ - UNIVERSAL MOUNT

EZM-4007

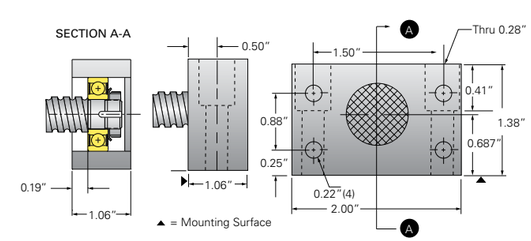

EZZE-MOUNTS™ - FLANGED

EZF-4007

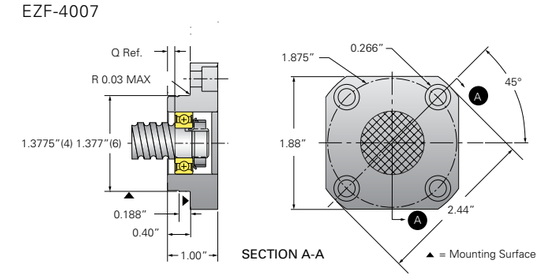

Note: Speed charts are based on using bi-polar motors with chopper drives at 100% duty cycle. Chopper drive curves were created using full steps on a 5 volt motor and a 40v power supply.

INCH LEAD SCREWS*

		NEMA 8	NEMA 11	NEMA 14	NEMA 17	NEMA 23	
		0.125" Ø	0.188" Ø	0.250" Ø	0.250" Ø	0.313" Ø	0.375" Ø
Lead (in)	Linear Travel / Step (in)						
0.0120	0.00006000	012-012					
0.0240	0.00012000				025-024		
0.0313	0.00015625			025-031	025-031		
0.0480	0.00024000	012-048					
0.0500	0.00025000		018-050				
0.0625	0.00031250	012-062		025-062	025-062		037-062
0.0787	0.00039350	012-078					
0.0960	0.00048000	012-096					
0.1000	0.00050000		018-100			031-100	037-100
0.1250	0.00062500	012-125		025-125	025-125		
0.1575	0.00078750	012-151					
0.1660	0.00083000					031-166	037-166
0.2000	0.00100000		018-200				037-200
0.2500	0.00125000			025-250	025-250	031-250	037-250
0.3750	0.00187500						037-375
0.4000	0.00200000						037-400
0.5000	0.00250000			025-500	025-500	031-500	037-500
0.7500	0.00375000			025-750	025-750		
1.0000	0.00500000					031-999	037-999

METRIC LEAD SCREWS*

		NEMA 8	NEMA 11	NEMA 14	NEMA 17	NEMA 23	
		4mm Ø	4mm Ø	6mm Ø	6mm Ø	8mm Ø	10mm Ø
Lead (mm)	Linear Travel / Step (mm)						
1.00	0.005	016-039	016-039	025-039	025-039		
2.00	0.010	016-078				032-078	039-078
3.00	0.015						
4.00	0.020	016-157	016-157			032-157	
5.00	0.025		016-196				037-196
6.00	0.030			024-236	024-236		
8.00	0.040					032-315	
10.00	0.050	016-393	016-393			032-393	039-393
12.00	0.060			024-472	024-472	032-472	039-472
15.00	0.075					032-590	039-590
20.00	0.100					032-787	039-787
25.00	0.125					032-984	
30.00	0.150					032-M30	
35.00	0.175						039-M35

*More sizes available - Contact Helix for more information

LEAD SCREW

Material	300 Series Stainless Steel
Available Coatings	PTFE - For use with Acetal nuts
	Ceramic Coating - for use with bronze nuts
	FNC - For use with bronze or acetal nuts
Standard Lead Accuracy [in/ft (µm/300 mm)]	0.010 (250)
Precision Lead Accuracy [in/ft (µm/300 mm)]	0.003 (75)
Straightness [in/ft (µm/300 mm)]	0.005 (125)

LEAD SCREW NUT

Standard Material	Helix Precision Acetal (internally Lubricated)
High Performance Material	Helix Precsion Thermoplastic (internally Lubricated)
Extreme Strength Material	Helix Bronze
Nut Efficiency (2)	14-86
Typical Linear Travel Life [in (km)]	10 x 10^6 (250)

END MACHINING FOR LEAD SCREWS*

Standard Edge Break

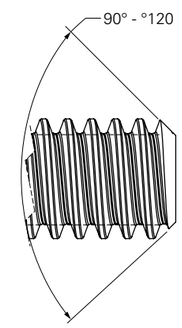

Turned Journal

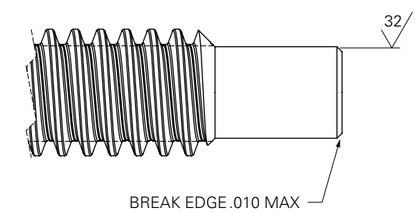

Ground Journal

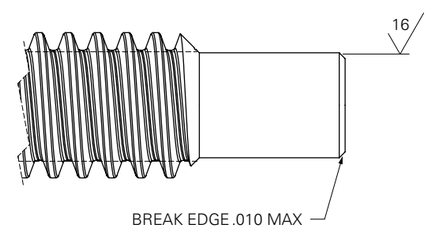

Snap Ring Groove

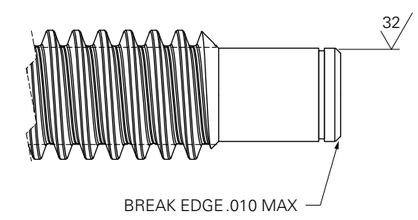

*Visit helixlinear.com for end machining templates.

CREATE PACKAGED ACTUATION SOLUTIONS

CUSTOMIZE STANDARD ACTUATOR DESIGNS

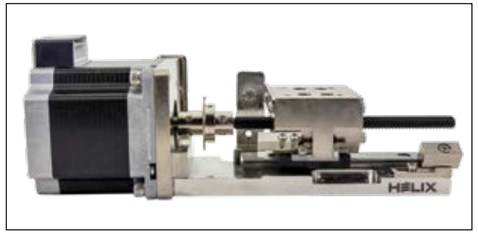

Fully customized linear slide

Customized Linear Slides

- Hybrid stepper motors and servo motors
- Motor mount
- Integrated profile rail
- Flags & switches
- Custom lead screw nut
- PTFE coated screw

Linear Actuator with integrated profile rail

Customized Linear Actuators

- Hybrid stepper motors and servo motors
- Integrated profile rail
- Bearing supports for screw
- Customized carriage block
- PTFE coated screw
- Custom molded anti-backlash nut

The custom solutions team at Helix is focused on delivering custom actuation systems.

Our services include:

- Design support
- Prototyping / 3D printing
- Testing and qualification
- Production assembly and integration

EZZE-MOUNT™ BEARING SUPPORTS

EXTEND THE LIFE OF YOUR LINEAR ACTUATOR

Stainless Steel and Anodonized Aluminum EZZE-Mounts™

Helix bearing supports can be easily added to a hybrid linear actuator to support the end of the lead screw. Adding a Helix EZZE-Mount™ helps extend the life of your linear actuator by eliminating radial deflection and vibration.

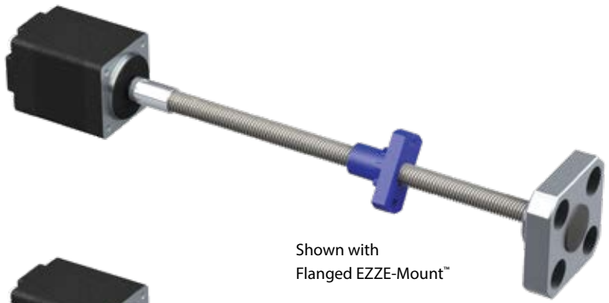

Shown with
Flanged EZZE-Mount™

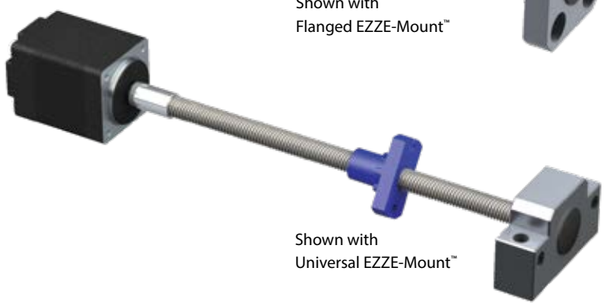

Shown with
Universal EZZE-Mount™

Also Available in Double Bearing Options

Flanged Double Bearing EZZE-Mount™

Universal Double Bearing EZZE-Mount™

MOTOR

Model Number	SMA - 8	SMA - 11	SMA - 14	SMA - 17	SMA - 23
Frame Size	NEMA 8	NEMA 11	NEMA 14	NEMA 17	NEMA 23
Step Size [°]	1.8	1.8	1.8	1.8	1.8
Max. Axial Load (3) [lbs (N)]	10 (45)	20 (89)	50 (222)	75 (334)	200 (890)
Max. Radial Play [in @ lbs (mm @ N)]	0.001 @ 1 (0.03 @ 4)				
End Play [in @ lbs (mm @ N)]	0.002 @ 2 (0.05 @ 9)				
Concentricity of Mounting Pilot to Shaft [in (mm)] 0.003 (0.08) TIR	0.003 (0.08) TIR				
Perpendicularity of Shaft to Mounting Face [in (mm)]	0.003 (0.08) TIR				
Max. Case Temperature [°F (°C)]	140 (60)			176 (80)	
Storage Temperature [°F (°C)]	-4 to 122 (-20 to 50)				
Max. Humidity (non-condensing) [%]	85				
Magnet Wire Insulation	Class B 130 °C (266 °F)				
Insulation Resistance	100 Mohm @ 500 VDC				
Dielectric Strength	500 VAC for 1 minute				

ASSEMBLY

Max. Backlash with Standard Nut [in (mm)]	0.010 (0.25)
Max. Backlash with Helix Anti-Backlash Nut [in (mm)]	0 (0)
Runout [in/ft (µm/300 mm)]	0.007 (175)
Operating Temperature [°F (°C)]	15 to 125 (- 10 to 50)

ENCODER DIMENSIONS

NEMA Size 8

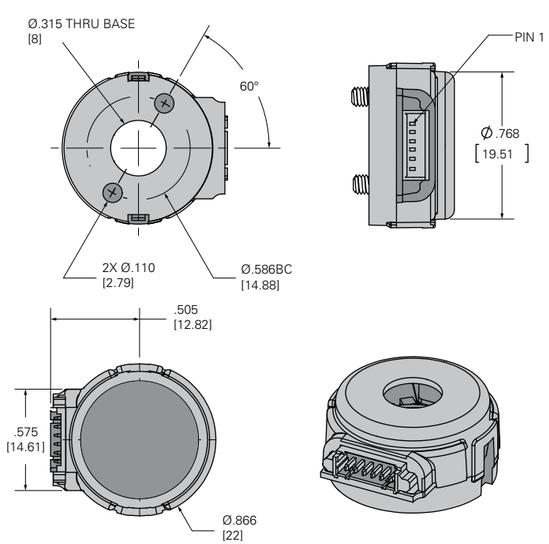

NEMA Sizes 11, 14, 17, 23

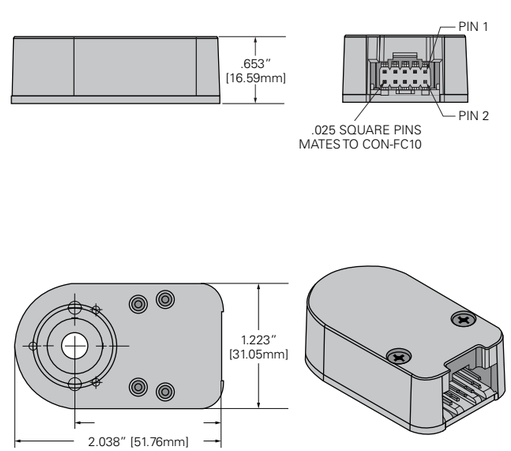

Detent or Residual Torque
The torque required to rotate the motor's output shaft with no current applied to the windings.

Drives
Term depicting the external electrical components to run a Stepper Motor System. This will include power supplies logic sequencers, switching components and usually a variable frequency pulse source to determine the step rate.

Dynamic Torque
The torque generated by the motor at a given step rate. Dynamic torque can be represented by pull-in torque or pull-out torque.

Holding Torque
The torque required to rotate the motor's output shaft while the windings are energized with a steady state D.C. current.

Inertia
The measure of a body's resistance to acceleration or deceleration. Typically used in reference to the inertia of the load to be moved by a motor or the inertia of a motor's rotor.

Linear Step Increment
The linear travel movement generated by the lead screw with each single step of the rotor.

Maximum Temperature Rise
Allowable increase in motor temperature by design. Motor temperature rise is caused by the internal power dissipation of the motor as a function of load. This power dissipation is the sum total from I^2R (copper loss), iron (core) loss, and friction. The final motor temperature is the sum of the temperature rise and ambient temperature.

Pulse Rate
The number of pulses per second (pps) applied to the windings of the motor.The pulse rate is equivalent to the motor step rate.

Pulses Per Second (PPS)
The number of steps that the motor takes in one second (sometimes called "steps per second"). This is determined by the frequency of pulses produced by the motor drive.

Ramping
A drive technique to accelerate a given load from a low step rate, to a given maximum step rate and then to decelerate to the intial step rate without the loss of steps.

Single Step Response
Time required for the motor to make one complete step.

Step
The angular rotation produced by the rotor each time the motor receives a pulse. For linear actuators a step translates to a specific linear distance.

Step Angle
The rotation of the rotor caused by each step, measured in degrees.

Steps Per Revolution
The total number of steps required for the rotor to rotate 360°.

Torque
The sum of the frictional load torque and inertial torque.

Pull Out Torque
The maximum torque the motor can deliver once the motor is running at constant speed. Since there is no change in speed there is no inertial torque. Also, the kinetic energy stored in the rotor and load interia help to increase the pull of the torque.

Pull In Torque
The torque required to accelerate the rotor inertia and any rigidly attached external load up to speed plus whatever friction torque must be overcome. Pull-in torque, therefore, is always less than pull-out torque.

Torque to Inertia Ratio
Holding torque divided by rotor inertion.

HIGH TECH QUALITY EXPERIENCE

When you select Helix Linear Technologies as a supplier, you can be assured that your product will be designed and tested to rigorous product planning. Pre-design activity includes understanding of customer requirements applied to predictive models, engineering calculations and linear modeling through prototype development, stereo-lithography samples of form, fit, and function that verify design criteria.

VALIDATION AND VERIFICATION

Through years of rigorous development, Helix has proven its designs and manufacturing processes against the most stringent standards and specifications. Design and process verification and validation tools are employed throughout the product life cycle.

CERTIFICATIONS

Helix serves many customers in the Aerospace and Medical device markets and has complied with common Quality System Requirements.


SMITHERS
QUALITY ASSESSMENTS
CERTIFICATE OF APPROVAL
Helix Linear Technologies
23200 Commerce Park
Beachwood, OH 44122
ISO 9001:2008 with Design
ANAB

ITAR

Helix is registered with the Department of State For International Traffic In Arms Compliance.

The Department of State is responsible for the export and temporary import of defense articles and services governed by 22 U.S.C. 2778 of the Arms Export Control Act.

ITAR International Traffic in Arms Regulations Compliant

INSPECTION CAPABILITY

Roundness Measurement - Critical to quality, characteristics such as roundness are monitored throughout the screw manufacturing process.

Lead Accuracy Measurement - Precise lead accuracy measurment systems are utilized to validate process to conform to Helix internal specifications and customer requirements.

Contour Readers - Prior to the start of any production run, thread form geometry is precisely measured to stringent engineering specifications.

QUALITY TOOLS:

- Design for Six Sigma manufacturing
- D.O.E. (Design of Experiments)
- APQP (Advanced Product Quality Planning)
- DFMEA, PFEMA
- FEA (Finite Element Analysis)
- DVP&R (Design Verification Plan & Report)
- Reliability testing
- Process validation to 21 CFR Part 82 (Medical Device)

TESTING

Efficiency Measurement - Helix Engineering has designed test machines to measure and validate screw assembly efficiency.

Torque Measurement - Preloaded lead screw assemblies are evaluated to determine compliance with engineering specifications utilizing a dynamic torque testing machine.

FUNCTIONAL TESTING

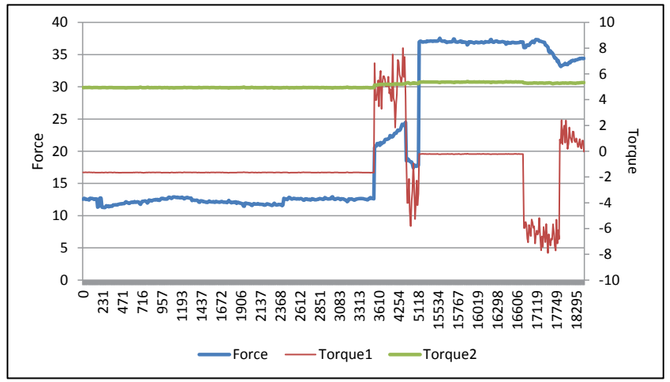

Helix test systems and engineered testing processes perform analysis and verification of life, durability, and performance. The functional testing defines operating limits in specifications and helps set defined targets in product launch process and sssurance plans.

The engineered testing provides predictive tools, generates data for prognostics, and validates performance wear models. Life tests help determine performance in multiple operating conditions as well. Helix offers proof testing for customers developing new systems and actuators to help accelerate product release dates.

HELIX QUALITY EVOLUTION

- Developed Manufacturing Systems
- Quality Systems and Accreditations
- Supply Chain Approval Process
- State of the Art Management Systems
- APQP Launch Protocols
- System and Process Protocols
- Engineering Analysis and Predictive Tools
- Reliability Engineering and Testing
- Custom Engineered and Built Test Instrumentation
- Design and Test for Fault Tolerance and Prognostics
- Certification Testing

LINEAR MOTION APPLICATIONS

High Quality, Precision Linear Motion Solutions

LIFE SCIENCES

- Pipeting automation
- Syringe pumps
- Microscopes
- MRI scanners
- CT scanners
- Radiographic machines
- In-vitro diagnostics
- Genomics
- Blood gas chemistry

PRINTING & BINDING

- "Z" axis actuators
- Multi-axis gantries
- 3D printing
- Automation / Material handling
- Additive manufacturing (AD)
- Large format sign printing
- Digital offset printing process
- Folding and sealing equipment
- Thermal CTP systems

SECURITY - MILITARY

- Automated door locking systems
- Pan-tilt-zoom cameras
- Automated gates
- Tactical automated security cameras
- Missle fin actuation
- Tank sighting systems
- Drones and UAVs
- Torpedo fin actuation
- Guided munitions

SEMICONDUCTOR

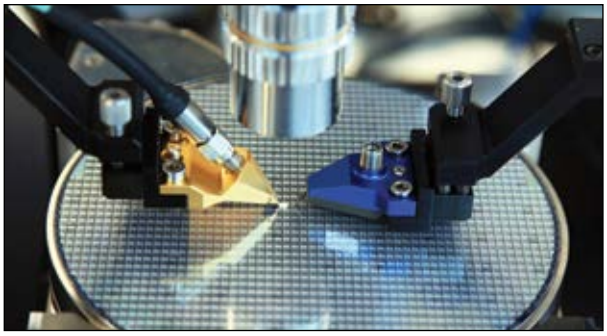

- Burnishing stages
- Stacking systems
- Vision inspection machines
- X, Y, Z gantries
- Wafer elevators / Wafer handling
- Acoustic microscopes
- Ultrasonic imaging
- Tuning coils
- Vacuum chamber doors

HELIX™ LINEAR TECHNOLOGIES

helixlinear.com

23200 Commerce Park Road | Beachwood, OH 44122 USA | 216-485-2232 or 1-855-435-4958 | email: sales@helixlinear.com